Glasgow Iron Company

Glasgow Iron Company

Pottstown, Penna.

MANUFACTURERS OF

Iron and Steel Plates
Muck Bars and
Flanged and Pressed Work

PHILADELPHIA OFFICE

GLASGOW IRON COMPANY, 603 to 608 Harrison Building

NEW YORK OFFICE

D. F. COONEY & COMPANY, 88 Washington Street

BOSTON OFFICE

HARRINGTON, ROBINSON & COMPANY, 272 Franklin Street

1912

AWARDED GOLD MEDAL FOR EXCELLENCE

To the Trade

In this catalogue, which supersedes all previous ones, we illustrate and describe a few of the many types of our flanged and pressed work.

We call your attention to several changes made in catalog. The sizes of manhole and saddle yokes have been slightly changed; the table of depths of dish has been changed; we drop the 15 inch and 21 inch radii and substitute 14 inch, 16 inch, 20 inch and 22 inch radii; we also carry out the table showing the maximum depth of dish within our capacity.

We list several new products of pressed steel work; among them are the Roe Lug for vertical shells; a line of Heavy Threaded Pipe Flanges, Companion Flanges for pipe lines; welding with the Oxy-Acetylene Torch and Flat Flanges for rivetted pipe, of these we make a specialty.

We invite correspondence relative to all kinds of flanged or pressed and bent work.

Estimates given promptly upon request.

GLASGOW IRON COMPANY

Pottstown, Penna., September 1, 1912

Put a copy of this catalog in the hands of your shop foreman and your draftsman.

Iron and Steel Plates

We manufacture sheared and universal rolled steel boiler, tank, bridge and ship plates, and sheared and universal iron plates for skelp, tanks, standpipes, flats for cars and locomotives, etc., etc.

THE ASSOCIATION OF AMERICAN STEEL MFRS.

STANDARD SPECIFICATIONS

Revised 1912

STRUCTURAL STEEL

Grades

1. These specifications cover three classes of structural steel, namely:

Class A steel, to be used for railway bridges and ships.

Class B steel, to be used for buildings, highway bridges, train sheds and similar structures.

Class C steel, to be used for structural rivets.

I. MANUFACTURE

Process

2. Steel for Classes A and C shall be made by the open-hearth process. Steel for Class B may be made either by the open-hearth or by the Bessemer process.

II. CHEMICAL PROPERTIES AND TESTS

Chemical Composition

3. The steel shall conform to the following requirements as to chemical composition:

Elements Considered	Class A Steel	Class B Steel	Class C Steel
Phosphorus, max., per cent:			
Basic open hearth	0.04	0.06	0.04
Acid open hearth	0.06	0.08	0.04
Bessemer		0.10	
Sulphur, max., per cent	0.05		0.045

Ladle Analyses

4. To determine whether the material conforms to the requirements specified in section 3, an analysis shall be made by the manufacturer from a test ingot taken during the pouring of each melt. A copy of this analysis shall be given to the purchaser or his representative, if requested.

Check Analyses

5. A check analysis of Class A and Class C steel may be made by the purchaser from finished material representing each melt, in which case an excess of 25 per cent above the requirements specified in section 3 shall be allowed.

III. PHYSICAL PROPERTIES AND TESTS

Tension Tests

6. The steel shall conform to the following requirements as to tensile properties:

Properties Considered	Class A Steel	Class B Steel	Class C Steel
Tensile strength, lb. per sq. in. . . .	55,000–65,000	55,000–65,000 *	46,000–56,000
Yield point, minimum, lb. per sq. in.	0.5 tens. str.	0.5 tens. str.	0.5 tens. str.
Elongation in 8 in., min., per cent.	1,400,000 † / tens. str.	1,400,000 † / tens. str.	1,400,000 / tens. str.
Elongation in 2 in., min., per cent. (Fig. 2)	22	22	

* See section 8. † See section 9.

Yield Point

7. The yield point shall be determined by the drop of the beam of the testing machine.

Modification in Tensile Strength

8. Class B steel may have tensile strength up to 70,000 lb. maximum, provided the elongation is not less than the percentage required for 65,000 lb. tensile strength.

Modifications in Elongation

9. (a) For material over ¾ in. in thickness, a deduction of 1 from the percentage of elongation in 8 in. specified for Classes A and B in section 6 shall be made for each increase of ⅛ in. in thickness above ¾ in., to a minimum of 18 per cent.

(b) For material under 5/16 in. in thickness, a deduction of 2.5 from the percentage of elongation in 8 in. specified for Classes A and B in section 6 shall be made for each decrease of 1/16 in. in thickness below 5/16 in.

Character of Fracture

10. All broken tension test specimens shall show a silky fracture.

Bend Tests

11. (a) The test specimen for plates, shapes and bars shall bend cold through 180 deg. without fracture on the outside of the bent portion, as follows: For material ¾ in. and under in thickness, flat on itself; for material over ¾ in. up to 1¼ in. in thickness, around a pin the diameter of which is equal to 1½ times the thickness of the specimen; and for material over 1¼ in. in thickness, around a pin the diameter of which is equal to twice the thickness of the specimen.

(b) The test specimen for pins and rollers shall bend cold through 180 deg. around a 1-in. pin without fracture on the outside of the bent portion.

(c) A rivet rod shall bend cold through 180 deg. flat on itself without fracture on the outside of the bent portion.

(d) Bend tests may be made by pressure or by blows.

Test Specimens

12. (a) Tension and bend test specimens shall be taken from the finished rolled or forged product, and shall not be annealed or otherwise treated, except as specified in section 13.

(b) Tension and bend test specimens for plates, shapes and bars, except as specified in paragraph (c), shall be of the full thickness

of material as rolled, and with both edges milled to the form and dimensions shown in Fig. 1, or may have both edges parallel.

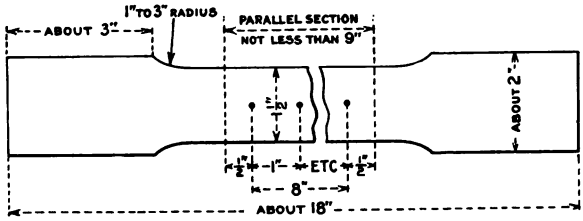

Fig. 1

(c) Tension and bend test specimens for plates and bars (except eye-bar flats) over 1½ in. in thickness or diameter may be turned or planed to a diameter or thickness of at least ¾ in. for a length of at least 9 in.

(d) Tension and bend test specimens for pins and rollers shall be taken parallel to the axis, 1 in. from the surface of the bar. Tension test specimens shall be of the form and dimensions shown in Fig. 2. Bend test specimens shall be 1 in. by ½ in. in section.

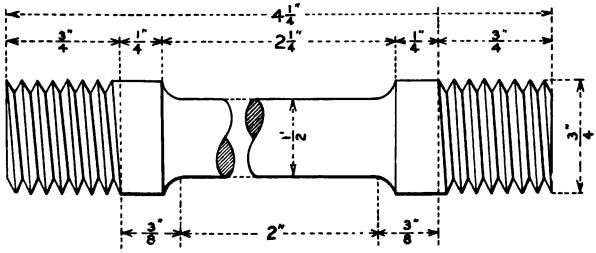

Fig. 2

(e) Rivet bars shall be tested in full-size section as rolled.

Annealed Specimens

13. Test specimens for material which is to be annealed or otherwise treated before use, shall be cut from properly annealed or similarly treated short lengths of the full section of the piece.

Number of Tests

14. (a) At least one tension test and one bend test shall be made from each melt. If material from one melt differs ⅜ in. or more in thickness, tests shall be made from both the thickest and the thinnest material rolled.

(b) If any test specimen develops flaws, or if an 8-in. tension test specimen breaks outside the middle third of the gage length, or if a 2-in. tension test specimen breaks outside the gage length, it may be discarded and another specimen substituted therefor.

(c) Material intended for fillers or ornamental purposes will not be subject to test.

IV. PERMISSIBLE VARIATIONS IN WEIGHT AND GAGE

Permissible Variations

15. (a) The sectional area or weight of each structural shape or rolled edge plate shall not vary more than 2.5 per cent. from theoretical or specified amounts.

(b) The thickness or weight of each sheared plate shall conform to the schedule of permissible variations, Manufacturers' Standard practice, appended to these specifications.

(c) The weights of angles, tees, zees and channels of bar sizes, and the dimensions of rounds, squares, hexagons and flats, shall conform to the Manufacturers' Standard practice governing the allowable variations in size and weight of hot-rolled bars, appended to these specifications.

V. FINISH

Finish

16. The finished material shall be free from injurious defects, and shall have a workmanlike finish.

VI. MARKING

Marking

17. The name of the manufacturer and the melt number shall be legibly marked, stamped or rolled upon all finished material, except

that each pin and roller shall be stamped on the end. Rivet and lattice steel and other small pieces may be shipped in securely fastened bundles, with the above marks legibly stamped on attached metal tags. Test specimens shall have their melt numbers plainly marked or stamped.

VII. INSPECTION AND REJECTION

Inspection

18. The inspector representing the purchaser shall have free entry, at all times while work on the contract of the purchaser is being performed, to all parts of the manufacturer's works which concern the manufacture of the material ordered. The manufacturer shall afford the inspector, free of cost, all reasonable facilities to satisfy him that the material is being furnished in accordance with these specifications. All tests and inspection shall be made at the place of manufacture prior to shipment, and shall be so conducted as not to interfere unnecessarily with the operation of the works.

Rejection

19. Material which, subsequent to the above tests at the mills and its acceptance there, develops weak spots, brittleness, cracks or other imperfections, or is found to have injurious defects, may be rejected at the shop, and shall then be replaced by the manufacturer at his own cost.

BOILER STEEL

Grades

1. There shall be three grades of steel for boilers, namely: flange, firebox, and boiler rivet.

I. MANUFACTURE

Process

2. The steel shall be made by the open-hearth process.

II. CHEMICAL PROPERTIES AND TESTS

Chemical Composition

3. The steel shall conform to the following requirements as to chemical composition:

Elements Considered	Flange Steel	Firebox Steel	Boiler Rivet Steel
Manganese, per cent	0.30 to 0.60	0.30 to 0.50	0.30 to 0.50
Phosphorus, max., per cent:			
Basic	0.04	0.035	0.04
Acid	0.05	0.04	0.04
Sulphur, max., per cent	0.05	0.04	0.045

Ladle Analyses

4. To determine whether the material conforms to the requirements specified in section 3, an analysis shall be made by the manufacturer from a test ingot taken during the pouring of each melt. A copy of this analysis shall be given to the purchaser or his representative.

Check Analyses

5. A check analysis may be made by the purchaser from a broken tension test specimen representing each plate as rolled, and this analysis shall conform to the requirements specified in section 3.

III. PHYSICAL PROPERTIES AND TESTS

Tension Tests

6. The steel shall conform to the following requirements as to tensile properties:

Properties Considered	Flange Steel	Firebox Steel	Boiler Rivet Steel
Tensile strength, lb. per sq. in.	55,000–65,000	52,000–62,000	45,000–55,000
Yield point, min., lb. per sq. in.	0.5 tens. str.	0.5 tens. str.	0.5 tens. str.
Elongation in 8 in., min., per cent	1,450,000* / tens. str.	1,450,000* / tens. str.	1,450,000 / tens. str.

* See section 8.

Yield Point

7. The yield point shall be determined by the drop of the beam of the testing machine.

Modifications in Elongation

8. (a) For plates over ¾ in. in thickness, a deduction of 0.5 from the specified percentage of elongation will be allowed for each increase of ⅛ in. in thickness above ¾ in., to a minimum of 20 per cent.

(b) For plates under 5/16 in. in thickness, a deduction of 2.5 from the percentage of elongation specified in section 6 shall be made for each decrease of 1/16 in. in thickness below 5/16 in.

Bend Tests

9. (a) Cold-bend tests shall be made on the material as rolled.

(b) Quench-bend test specimens, before bending, shall be heated to a light cherry red as seen in the dark (about 1200 deg. F.), and quenched in water the temperature of which is about 80 deg. F.

(c) Specimens for cold-bend and quench-bend tests of flange and firebox steel shall bend through 180 deg. without fracture on the outside of the bent portion, as follows: For material ¾ in. and under in thickness, flat on themselves; for material over ¾ in. up to 1¼ in. in thickness, around a pin the diameter of which is equal to the thickness of the specimen; and for material over 1¼ in. in thickness, around a pin the diameter of which is equal to 1½ times the thickness of the specimen.

(d) Specimens for cold-bend and quench-bend tests of boiler rivet steel shall bend cold through 180 deg. flat on themselves without fracture on the outside of the bent portion.

(e) Bend tests may be made by pressure or by blows.

Test Specimens

10. (a) Tension and bend test specimens for plates shall be taken from the finished product, and shall be of the full thickness of material as rolled. Tension test specimens shall be of the form and dimensions shown in Fig. 1. Bend test specimens shall be 1½ in. to 2½ in. wide and shall have the sheared edges milled or planed.,

(b) The tension and bend test specimens for rivet bars shall be of the full-size section of material as rolled.

Number of Tests

11. (a) One tension, one cold-bend, and one quench-bend test shall be made from each plate as rolled.

(b) Two tension, two cold-bend, and two quench-bend tests shall be made for each melt of rivet steel.

(c) If any test specimen develops flaws, or if a tension test specimen breaks outside the middle third of the gage length, it may be discarded and another specimen substituted therefor.

IV. PERMISSIBLE VARIATIONS IN WEIGHT AND GAGE

Permissible Variations

12. (a) The thickness or weight of each sheared plate shall conform to the schedule of permissible variations, Manufacturers' Standard practice, appended to these specifications.

(b) The dimensions of rivet bars shall conform to the Manufacturers' Standard practice governing allowable variations in the size of hot-rolled bars, appended to these specifications.

V. FINISH

Finish

13. The finished material shall be free from injurious defects, and shall have a workmanlike finish.

VI. MARKING

Marking

14. The melt or slab number, name of the manufacturer, grade, and the minimum tensile strength for its grade as specified in section 6 shall be legibly stamped on each plate. The melt or slab number shall be legibly stamped on each test specimen representing that melt or slab.

VII. INSPECTION AND REJECTION

Inspection

15. The inspector representing the purchaser shall have free entry, at all times while work on the contract of the purchaser is being performed, to all parts of the manufacturer's works which concern the manufacture of the material ordered. The manufacturer shall afford the inspector, free of cost, all reasonable facilities to satisfy him that

the material is being furnished in accordance with these specifications All tests and inspection shall be made at the place of manufacture prior to shipment, and shall be so conducted as not to interfere unnecessarily with the operation of the works.

Rejection

16. Material which, subsequent to the above tests at the mills and its acceptance there, develops weak spots, brittleness, cracks or other imperfections, or is found to have injurious defects, may be rejected at the shop, and shall then be replaced by the manufacturer at his own cost.

ADOPTED 1896

MANUFACTURERS' STANDARD PRACTICE

PERMISSIBLE VARIATIONS IN SHEARED PLATES

Schedule of Permissible Variations

The thickness or weight of each sheared plate shall not vary more than the permissible variations given below:

(a) **When ordering to weight:**—

For plates 12½ lb. per sq. ft. or over:

Under 100 in. in width, 2.5 per cent above or below the specified weight;

100 in. in width and over, 5 per cent above or below the specified weight.

For plates under 12½ lb. per sq. ft.:

Under 75 in. in width, 2.5 per cent above or below the specified weight;

75 to 100 in. in width, 5 per cent above or 3 per cent below the specified weight;

100 in. in width and over, 10 per cent above or 3 per cent below the specified weight.

(b) **When ordered to gage:**—The thickness of each plate shall not vary more than 0.01 in. under that ordered.

An excess over the nominal weight corresponding to the dimensions on the order shall be allowed for each plate, if not more than that shown in the following table; one cubic inch of rolled steel being assumed to weigh 0.2833 lb.:

TABLE OF ALLOWANCES FOR OVERWEIGHT FOR SHEARED PLATES WHEN ORDERED TO GAGE

Thickness Ordered, in.	Normal Weight, lb. per sq. ft.	Allowable Excess (expressed as percentage of Nominal Weight) For Width of Plate as follows:						
		Under 50 in.	50 in. to 70 in.	70 in. and over	Under 75 in.	75 in. to 100 in.	100 in. to 115 in.	115 in. and over
1/8 to 5/32	5.10 to 6.37	10	15	20	. . .	. . .	. . .	. . .
5/32 " 3/16	6.37 " 7.65	8.5	12.5	17	. . .	. . .	. . .	. . .
3/16 " 1/4	7.65 "10.20	7	10	15	. . .	. . .	. . .	. . .
1/4	10.20	. . .	. . .	. . .	10	14	18	. . .
5/16	12.75	. . .	. . .	. . .	8	12	16	. . .
3/8	15.30	. . .	. . .	. . .	7	10	13	17
7/16	17.85	. . .	. . .	. . .	6	8	10	13
1/2	20.40	. . .	. . .	. . .	5	7	9	12
9/16	22.95	. . .	. . .	. . .	4.5	6.5	8.5	11
5/8	25.50	. . .	. .	. . .	4	6	8	10
Over 5/8	. . .	. . .	. . .	. .	3.5	5	6.5	9

ADOPTED 1910

I. ALLOWABLE VARIATIONS IN THE WEIGHT OF BAR SIZES OF ANGLES, TEES, ZEES AND CHANNELS

For bar sizes of angles, tees, zees and channels the following average variations in weight will be permitted for sections of the various dimensions and thicknesses stated, namely:

Dimensions	Thickness	Variation in Weight Over and Under
Any dimension over 1½ in.	Over 3/16 in.	4 per cent
All dimensions 1½ in. and less	Over 3/16 in.	5 " "
Any dimension over 1½ in.	3/16 in. and less	6 " "
All dimensions 1½ in. and less	3/16 in. and less	7 " "

NOTE—A channel is in "bar" size when its greatest dimension is less than 3 in. An angle, tee or zee is in "bar" size when its greatest dimension is less than 3 in.; or when it is 3 in. or more and at the same time the thickness is less than ¼ in.

II. ALLOWABLE VARIATIONS IN THE SIZE OF HOT-ROLLED BARS

Rounds, Squares, Hexagons

	Variation in Size	
	Under	Over
Up to and including ½ in.	.007 in.	.007 in.
Over ½ in. " " 1 "	.010 "	.010 "
Over 1 " " " 2 "	1/64 "	1/32 "
Over 2 " " " 3 "	1/32 "	3/64 "
Over 3 " " " 5 "	1/32 "	3/32 "
Over 5 " " " 8 "	1/16 "	1/8 "

Flats

Width of Flats	Variation in Width		Variation in Thickness, Under and Over			
			Thickness of Flats			
	Under	Over	3/16 in. and under	Over 3/16 in. up to 1/2 in.	Over 1/2 in. up to 1 in.	Over 1 in. up to 2 in.
Up to and including 1 in.	1/64 in.	1/32 in.	.006 in.	.008 in.	.010 in.	
Over 1 in. up to and including 2 in.	1/32 "	3/64 "	.008 "	.012 "	.015 "	1/32
Over 2 in. up to and including 4 in.	3/64 "	1/16 "	.010 "	.015 "	.020 "	1/32
Over 4 in. up to and including 6 in.	1/16 "	3/32 "	.010 "	.015 "	.020 "	1/32

FRACTIONS OF ONE INCH IN DECIMAL EQUIVALENTS

8ths

1/8 = .125
1/4 = .25
3/8 = .375
1/2 = .50
5/8 = .625
3/4 = .75
7/8 = .875

16ths

1/16 = .0625
3/16 = .1875
5/16 = .3125
7/16 = .4375
9/16 = .5625
11/16 = .6875
13/16 = .8125
15/16 = .9375

32ds

1/32 = .03125
3/32 = .09375
5/32 = .15625
7/32 = .21875
9/32 = .28125
11/32 = .34375
13/32 = .40625
15/32 = .46875
17/32 = .53125
19/32 = .59375
21/32 = .65625
23/32 = .71875
25/32 = .78125
27/32 = .84375
29/32 = .90625
31/32 = .96975

64ths

1/64 = .015625
3/64 = .046875
5/64 = .078125
7/64 = .109375
9/64 = .140625
11/64 = .171875
13/64 = .203125
15/64 = .234375
17/64 = .265625
19/64 = .296875
21/64 = .328125
23/64 = .359375
25/64 = .390625
27/64 = .421875
29/64 = .453125
31/64 = .484375
33/64 = .515625
35/64 = .546875
37/64 = .578125
39/64 = .609375
41/64 = .640625
43/64 = .671875
45/64 = .703125
47/64 = .734375
49/64 = .765625
51/64 = .796875
53/62 = .828125
55/64 = .859375
57/64 = .890625
59/64 = .921875
61/64 = .953125
63/64 = .984375

DECIMAL PARTS OF A FOOT FOR EACH $\frac{1}{32}$ OF AN INCH

Inches	0	1	2	3	4	5	6	7	8	9	10	11
0	0	.0833	.1667	.2500	.3333	.4167	.5000	.5833	.6667	.7500	.8333	.9167
1/32	.0026	.0859	.1693	.2526	.3359	.4193	.5026	.5859	.6693	.7526	.8359	.9193
1/16	.0052	.0885	.1719	.2552	.3385	.4219	.5052	.5885	.6719	.7552	.8385	.9219
3/32	.0078	.0911	.1745	.2578	.3411	.4245	.5078	.5911	.6745	.7578	.8411	.9245
1/8	.0104	.0937	.1771	.2604	.3437	.4271	.5104	.5937	.6771	.7604	.8437	.9271
5/32	.0130	.0964	.1797	.2630	.3464	.4297	.5130	.5964	.6797	.7630	.8464	.9297
3/16	.0156	.0990	.1823	.2656	.3490	.4323	.5156	.5990	.6823	.7656	.8490	.9323
7/32	.0182	.1016	.1849	.2682	.3516	.4349	.5182	.6016	.6849	.7682	.8516	.9349
1/4	.0208	.1042	.1875	.2708	.3542	.4375	.5208	.6042	.6875	.7708	.8542	.9375
9/32	.0234	.1068	.1901	.2734	.3568	.4401	.5234	.6068	.6901	.7734	.8568	.9401
5/16	.0260	.1094	.1927	.2760	.3594	.4427	.5260	.6094	.6927	.7760	.8594	.9427
11/32	.0286	.1120	.1953	.2786	.3620	.4453	.5286	.6120	.6953	.7786	.8620	.9453
3/8	.0312	.1146	.1979	.2812	.3646	.4479	.5312	.6146	.6979	.7812	.8646	.9479
13/32	.0339	.1172	.2005	.2839	.3672	.4505	.5339	.6172	.7005	.7839	.8672	.9505
7/16	.0365	.1198	.2031	.2865	.3698	.4531	.5365	.6198	.7031	.7865	.8698	.9531
15/32	.0391	.1224	.2057	.2891	.3724	.4557	.5391	.6224	.7057	.7891	.8724	.9557
1/2	.0417	.1250	.2083	.2917	.3750	.4583	.5417	.6250	.7083	.7917	.8750	.9583
17/32	.0443	.1276	.2109	.2943	.3776	.4609	.5443	.6276	.7109	.7943	.8776	.9609
9/16	.0469	.1302	.2135	.2969	.3802	.4635	.5469	.6302	.7135	.7969	.8802	.9635
19/32	.0495	.1328	.2161	.2995	.3828	.4661	.5495	.6328	.7161	.7995	.8828	.9661
5/8	.0521	.1354	.2188	.3021	.3854	.4688	.5521	.6354	.7188	.8021	.8854	.9688
21/32	.0547	.1380	.2214	.3047	.3880	.4714	.5547	.6380	.7214	.8047	.8880	.9714
11/16	.0573	.1406	.2240	.3073	.3906	.4740	.5573	.6406	.7240	.8073	.8906	.9740
23/32	.0599	.1432	.2266	.3099	.3932	.4766	.5599	.6432	.7266	.8099	.8932	.9766
3/4	.0625	.1458	.2292	.3125	.3958	.4792	.5625	.6458	.7292	.8125	.8958	.9792
25/32	.0651	.1484	.2318	.3151	.3984	.4818	.5651	.6484	.7318	.8151	.8984	.9818
13/16	.0677	.1510	.2344	.3177	.4010	.4844	.5677	.6510	.7344	.8177	.9010	.9844
27/32	.0703	.1536	.2370	.3203	.4036	.4870	.5703	.6536	.7370	.8203	.9036	.9870
7/8	.0729	.1562	.2396	.3229	.4062	.4896	.5729	.6562	.7396	.8229	.9062	.9896
29/32	.0755	.1589	.2422	.3255	.4089	.4922	.5755	.6589	.7422	.8255	.9089	.9922
15/16	.0781	.1615	.2448	.3281	.4115	.4948	.5781	.6615	.7448	.8281	.9115	.9948
31/32	.0807	.1641	.2474	.3307	.4141	.4974	.5807	.6641	.7474	.8307	.9141	.9974

MAXIMUM SIZES OF SHEARED STEEL PLATES

Thickness	Width in Inches																			Diameter of Circular Plates	Thickness
	20	24	30	36	42	48	54	60	66	72	78	84	86	90	93	96	100	102	103	104	
	Length in Inches																				
No. 10	155	155	155	155	155	155	155	140	130	....	....	....	....	....	....	....	....	....	....	....	72	No. 10
No. 8	165	165	165	165	165	165	165	155	140	130	....	....	....	....	....	....	....	....	....	....	78	No. 8
No. 7	240	240	240	240	240	240	240	215	200	180	165	....	....	....	....	....	....	....	....	...	84	No. 7
3/16	285	285	285	285	285	285	260	240	215	190	165	140	120	....	....	....	....	....	....	..	90	3/16
1/4	360	420	480	540	600	500	440	395	370	335	310	285	275	250	225	190	140	120	105	....	103	1/4
5/16	360	420	480	540	600	500	455	395	360	335	310	285	275	260	240	215	190	140	120	100	104	5/16
3/8	360	420	480	540	600	540	490	440	395	360	335	310	285	275	250	240	200	165	155	105	104	3/8
7/16	360	420	480	540	600	500	455	405	370	335	310	285	285	275	250	240	200	180	155	110	105	7/16
1/2	360	420	480	540	600	500	455	405	370	335	310	285	285	275	250	240	200	180	155	110	105	1/2
9/16	360	420	480	540	600	500	455	405	370	335	310	285	275	260	250	240	200	180	140	110	105	9/16
5/8	360	420	480	540	600	500	455	405	380	335	310	285	275	260	250	240	200	165	140	110	105	5/8
11/16	360	420	480	540	600	500	455	405	370	335	310	285	275	260	250	240	200	140	140	110	105	11/16
3/4	360	420	480	540	540	480	420	380	345	310	285	260	260	250	250	240	190	140	130	110	105	3/4
13/16	360	420	480	540	500	440	380	360	320	285	260	240	225	225	215	215	190	140	130	110	105	13/16
7/8	360	420	480	540	465	405	360	320	285	275	240	225	225	215	210	200	180	130	120	110	105	7/8
15/16	360	420	480	500	430	380	335	300	275	250	225	215	200	200	190	190	165	120	120	110	105	15/16
1	360	420	480	480	405	360	320	285	260	240	215	200	190	190	180	180	155	120	120	110	105	1

MAXIMUM SIZES OF UNIVERSAL ROLLED STEEL PLATES

Thickness	Width in Inches																			Thickness
	6	7	8	9	10	11	12	14	16	18	20	22	24	26	28	30	32	34	35½	
	Length in Feet																			
¼	75	75	75	75	75	75	75	75	75	75	75	70	70	70	70	65	65	65	65	¼
⅜	75	75	75	75	75	75	75	75	75	75	75	75	75	75	75	75	75	75	75	⅜
½	75	75	75	75	75	75	75	75	75	75	75	75	75	75	75	70	70	65	65	½
⅝	75	75	75	75	75	75	75	75	75	75	75	70	70	65	65	60	60	55	55	⅝
¾	75	75	75	75	75	75	75	70	70	70	65	65	65	60	60	55	55	50	50	¾
⅞	70	70	70	70	70	70	70	65	65	65	60	60	55	55	50	50	45	45	40	⅞
1	60	60	60	60	60	60	60	60	60	60	55	55	50	50	45	45	40	40	35	1
1¼	50	50	50	50	50	50	50	50	50	50	45	45	40	40	35	35	30	30	25	1¼
1½	40	40	40	40	40	40	40	40	40	40	35	35	30	30	25	25	22	22	20	1½
1¾	35	35	35	35	35	35	35	35	35	35	30	30	25	25	22	22	20	20		1¾
2	32	32	32	32	32	32	32	30	30	25	25	22	22	20	20					2
2¼	30	30	30	30	30	28	28	25	25	22	22	20	20							2¼
2½	25	25	25	25	25	22	22	20	20	18	18									2½
2¾	20	20	20	20	20	18	18	18												2¾
3	18	18	18	18																3

THEORETICAL WEIGHT OF CIRCULAR STEEL PLATES

The weight of Iron Plates is about 2 per cent. less than steel

Diam. Inches	Thickness, Inches							
	1/8	3/16	1/4	5/16	3/8	7/16	1/2	9/16
6	1.00	1.50	2.00	2.50	3.00	3.50	4.00	4.50
7	1.36	2.04	2.72	3.41	4.09	4.77	5.45	6.13
8	1.78	2.67	3.56	4.45	5.34	6.23	7.12	8.01
9	2.25	3.38	4.50	5.63	6.76	7.88	9.01	10.13
10	2.78	4.17	5.56	6.94	8.33	9.72	11.11	12.50
11	3.36	5.04	6.72	8.40	10.09	11.77	13.45	15.13
12	4.00	6.01	8.01	10.01	12.01	14.01	16.01	18.02
13	4.70	7.05	9.40	11.75	14.10	16.45	18.79	21.14
14	5.45	8.17	10.90	13.62	16.35	19.07	21.80	24.52
15	6.26	9.38	12.51	15.64	18.77	21.89	25.02	28.15
16	7.12	10.68	14.24	17.79	21.35	24.91	28.47	32.03
17	8.04	12.05	16.07	20.09	24.11	28.12	32.14	36.16
18	9.01	13.51	18.02	22.52	27.02	31.53	36.03	40.54
19	10.04	15.06	20.07	25.09	30.11	35.13	40.15	45.16
20	11.12	16.68	22.24	27.80	33.36	38.92	44.48	50.05
21	12.26	18.39	24.52	30.65	36.78	42.91	49.04	55.17
22	13.46	20.18	26.91	33.64	40.37	47.10	53.83	60.55
23	14.71	22.06	29.42	36.77	44.12	51.48	58.84	66.19
24	16.01	24.02	32.03	40.04	48.04	56.05	64.06	72.07
25	17.38	26.07	34.75	43.00	52.13	60.82	69.51	78.20
26	18.79	28.19	37.59	46.99	56.38	65.78	75.18	84.58
27	20.27	30.40	40.54	50.67	60.81	70.94	81.07	91.21
28	21.80	32.70	43.60	54.49	65.39	76.29	87.19	98.09
29	23.38	35.07	46.76	58.46	70.15	81.84	93.53	105.2
30	25.02	37.53	50.05	62.56	75.07	87.58	100.1	112.6
31	26.72	40.08	53.44	66.80	80.16	93.52	106 9	120.2
32	28.47	42.71	56.94	71.18	85.41	99.65	113.9	128.1
33	30.28	45.42	60.56	75.69	90.83	106.0	121.1	136.2
34	32.14	48.21	64.28	80.35	96.42	112.5	128.6	144.6
35	34.06	51.09	68.12	85.15	102.2	119.2	136.2	153.3
36	36.03	54.05	72.07	90.08	108.1	126.1	144.1	162.1
37	38.06	57.09	76.12	95.16	114.2	133.2	152.2	171.3
38	40.15	60.22	80.30	100.4	120.4	140.5	160.6	180.7
39	42.29	63.43	84.58	105.7	126.9	148.0	169.1	190.3
40	44.48	66.73	88.97	111.2	133.4	155.7	177.9	200.2
41	46.74	70.10	93.47	116.8	140.2	163.6	186.9	210.3
42	49.02	73.54	98.05	122.6	147.1	171.6	196.1	220.6
43	51.41	77.11	102.8	128.5	154.2	179.9	205.6	231.3
44	53.83	80.74	107.6	134.6	161.5	188.4	215.3	242.2
45	56.30	84.45	112.6	140.7	168.9	197.0	225.2	253.4
46	58.83	88.25	117.7	147.1	176.5	205.9	235.3	264.7
47	61.42	92.13	122.8	153.5	184.2	215.0	245.7	276.4
48	64.06	96.09	128.1	160.1	192.2	224.2	256.2	288.2
49	66.76	100.1	133.5	166.9	200.2	233.6	267.0	300.4
50	69.51	104.3	139.0	173.8	208.5	243.3	278.0	312.8
51	72.32	108.5	144.6	180.8	216.9	253.1	289.2	325.4
52	75.18	112.8	150.4	187.9	225.5	263.1	300.7	338.3
53	78.10	117.1	156.2	195.2	234.3	273.3	312.4	351.4
54	81.07	121.6	162.1	202.7	243.2	283.8	324.3	364.8
55	84.10	126.2	168.2	210.3	252.3	294.4	336.4	378.5

To find the weight of a circular plate of a larger diameter than any here given, divide the diameter by 2 or 3 or 4, etc., until reduced to a diameter found in table. Multiply the weight of this diameter by the square of the divisor used and the product will be the weight required.

THEORETICAL WEIGHT OF CIRCULAR STEEL PLATES

The weight of Iron Plates is about 2 per cent. less than steel

Diam. Inches	Thickness, Inches							
	1/8	3/16	1/4	5/16	3/8	7/16	1/2	9/16
56	87.19	130.8	174.4	218.0	261.6	305.2	348.8	392.4
57	90.33	135.5	180.7	225.8	271.0	316.2	361.3	406.5
58	93.53	140.3	187.1	233.8	280.6	327.3	374.1	420.9
59	96.78	145.2	193.6	242.0	290.3	338.7	387.1	435.5
60	100.1	150.1	200.2	250.2	300.3	350.3	400.4	450.4
61	103.5	155.2	206.9	258.6	310.4	362.1	413.8	465.5
62	106.9	160.3	213.7	267.2	320.6	374.1	427.5	480.9
63	110.3	165 5	220.7	275.9	331.0	386.2	441.4	496.6
64	113.9	170.8	227.8	284.7	341.6	398.6	455.5	512.5
65	117.5	176.2	234.9	293.7	352.4	411.1	469.9	528.6
66	121.1	181.7	242.2	302.8	363.3	423.9	484.4	545.0
67	124.8	187.2	249.6	312.0	374.4	436.8	499.2	561.6
68	128.6	192.8	257.1	321.4	385.7	450.0	514.2	578.5
69	132.4	198.6	264.7	330.9	397.1	463.3	529.5	595.7
70	136.2	204.3	272.5	340.6	408.7	476.8	544.9	613.1
71	140.2	210.2	280.3	350.4	420.5	490.5	560.6	630.7
72	144.1	216.2	288.3	360.3	432.4	504.5	576.5	648.6
73	148.2	222.2	296.3	370.4	444.5	518.6	592.6	666.7
74	152.2	228.4	304.5	380.6	456.7	532.9	609.0	685.1
75	156.4	234.6	312.8	391.0	469.2	547.4	625.6	703.8
76	160.6	240.9	321.2	401.5	481.8	562.1	642.4	722.7
77	164.8	247.3	329.7	412.1	494.5	577.0	659.4	741.8
78	169.1	253.7	338.3	422.9	507.5	592.0	676.6	761.2
79	173.5	260.3	347.0	433.8	520.6	607.3	694.1	780.9
80	177.9	266.9	355.9	444.8	533.8	622.8	711.8	800.7
81	182.4	273.6	364.8	456.0	547.2	638.5	729.7	820.9
82	186.9	280.4	373.9	467.4	560.8	654.3	747.8	841.3
83	191.5	287.3	383.1	478.8	574.6	670.4	766.1	861.9
84	196.2	294.3	392.4	490.4	588.5	686.6	784.7	882.8
85	200.9	301.3	401.7	502.1	602.6	703.0	803.4	903.8
86	205.6	308.4	411.3	514.1	616.9	719.7	822.5	925.3
87	210.4	315.7	420.9	526.1	631.3	736.5	841.8	947.0
88	215.3	323.0	430.6	538.3	645.9	753.6	861.2	968.9
89	220.2	330.3	440.5	550.6	660.7	770.8	880.9	991.0
90	225.2	337.8	450.4	563.0	675.6	788.2	900.8	1013.0
91	230.2	345.4	460.5	575.6	690.7	805.8	920.9	1036.0
92	235.3	353.0	470.6	588.3	706.0	823.6	941.3	1059.0
93	240.5	360.7	480.9	601.2	721.4	841.6	961.9	1082.0
94	245.7	368.5	491.3	614.2	737.0	859.8	982.7	1106.0
95	250.9	376.4	501.8	627.3	752.8	878.2	1004.0	1129.0
96	256.2	384.3	512.5	640.6	768.7	896.8	1025.0	1153.0
97	261.6	392.4	523.2	654.0	784.8	915.6	1046.0	1177.0
98	267.0	400.5	534.0	667.6	801.1	934.6	1068.0	1202.0
99	272.5	408.7	545.0	681.2	817.5	953.7	1090.0	1226.0
100	278.0	417.0	556.1	695.1	834.1	973.1	1112.0	1251.0
101	283.6	425.4	567.2	709.0	850.9	992.7	1134.0	1276.0
102	289.3	433.9	578.6	723.2	867.8	1012.0	1157.0	1302.0
103	295.0	442.4	589.9	737.4	884.9	1032.0	1180.0	1327.0
104	300.7	451.1	601.4	751.8	902.1	1053.0	1203.0	1353.0
105	306.5	459.8	613.1	766.3	919.6	1073.0	1226.0	1379.0

To find actual weights of steel plates refer to table of allowances for overweight on pages 15 and 16.

AREAS OF CIRCLES, ADVANCING BY EIGHTHS

Diam.	0	⅛	¼	⅜	½	⅝	¾	⅞
0	.0	.012	.049	.11	.196	.306	.441	.601
1	.785	.994	1.227	1.484	1.767	2.073	2.405	2.761
2	3.141	3.546	3.976	4.43	4.908	5.411	5.939	6.491
3	7.068	7.669	8.295	8.946	9.621	10.32	11.04	11.79
4	12.56	13.36	14.18	15.03	15.90	16.80	17.72	18.66
5	19.63	20.62	21.64	22.69	23.75	24.85	25.96	27.10
6	28.27	29.46	30.67	31.91	33.18	34.47	35.78	37.12
7	38.48	39.87	41.28	42.71	44.17	45.66	47.17	48.70
8	50.26	51.84	53.45	55.06	56.74	58.42	60.13	61.86
9	63.62	65.39	67.20	69.02	70.88	72.75	74.66	76.58
10	78.54	80.51	82.51	84.54	86.59	88.66	90.76	92.88
11	95.03	97.20	99.40	101.62	103.86	106.13	108.43	110.75
12	113.09	115.46	117.85	120.27	122.71	125.18	127.67	130.19
13	132.73	135.29	137.88	140.50	143.13	145.80	148.49	151.20
14	153.93	156.70	159.48	162.29	165.13	167.99	170.87	173.78
15	176.71	179.67	182.65	185.66	188.69	191.74	194.82	197.93
16	201.06	204.21	207.39	210.59	213.82	217.07	220.35	223.65
17	226.98	230.33	233.70	237.10	240.52	243.97	247.45	250.94
18	254.47	258.01	261.58	265.18	268.80	272.44	276.11	279.81
19	283.52	287.27	291.04	294.83	298.64	302.48	306.35	310.24
20	314.16	318.09	322.06	326.05	330.06	334.10	338.16	342.25
21	346.36	350.49	354.65	358.84	363.05	367.28	371.54	375.82
22	380.13	384.46	388.82	393.20	397.60	402.03	406.49	410.97
23	415.47	420.00	424.55	429.13	433.73	438.36	443.01	447.69
24	452.39	457.11	461.86	466.63	471.43	476.25	481.10	485.97
25	490.87	495.79	500.74	505.71	510.70	515.72	520.76	525.83
26	530.93	536.04	541.19	546.35	551.54	556.76	562.00	567.26
27	572.55	577.87	583.20	588.57	593.95	599.37	604.80	610.26
28	615.75	621.26	626.79	632.35	637.94	643.54	649.18	654.84
29	660.52	666.22	671.95	677.71	683.49	689.29	695.12	700.98
30	706.86	712.76	718.69	724.64	730.61	736.61	742.64	748.69
31	754.76	760.87	766.99	773.14	779.31	785.51	791.73	797.97
32	804.25	810.54	816.86	823.21	829.57	835.97	842.39	848.83
33	855.30	861.79	868.30	874.85	881.41	888.00	894.62	901.25
34	907.92	914.61	921.32	928.06	934.82	941.60	948.42	955.25
35	962.11	969.00	975.90	982.84	989.80	996.78	1003.79	1010.82
36	1017.87	1024.96	1032.06	1039.19	1046.34	1053.52	1060.73	1067.96
37	1075.21	1082.49	1089.79	1097.11	1104.46	1111.84	1119.24	1126.66
38	1134.11	1141.59	1149.08	1156.61	1164.15	1171.73	1179.32	1186.94
39	1194.59	1202.26	1209.95	1217.67	1225.42	1233.18	1240.98	1248.79
40	1256.64	1264.51	1272.40	1280.31	1288.25	1296.22	1304.21	1312.22
41	1320.26	1328.32	1336.41	1344.52	1352.66	1360.82	1369.00	1377.21
42	1385.45	1393.70	1401.99	1410.30	1418.63	1426.99	1435.37	1443.77
43	1452.20	1460.66	1469.14	1477.64	1486.17	1494.73	1503.30	1511.91
44	1520.53	1529.19	1537.86	1546.56	1555.29	1564.04	1572.81	1581.61
45	1590.43	1599.28	1608.16	1617.05	1625.97	1634.92	1643.89	1652.89
46	1661.91	1670.95	1680.02	1689.11	1698.23	1707.37	1716.54	1725.73
47	1734.95	1744.19	1753.45	1762.74	1772.06	1781.40	1790.76	1800.15
48	1809.56	1819.00	1828.46	1837.95	1847.46	1856.99	1866.55	1876.14
49	1885.75	1895.38	1905.04	1914.72	1924.43	1934.16	1943.91	1953.69

AREAS OF CIRCLES, ADVANCING BY EIGHTHS

Diam.	0	⅛	¼	⅜	½	⅝	¾	⅞
50	1963.5	1973.3	1983.1	1993.0	2002.9	2012.8	2022.8	2032.8
51	2042.8	2052.8	2062.9	2072.9	2083.0	2093.2	2103.3	2113.5
52	2123.7	2133.9	2144.1	2154.4	2164.7	2175.0	2185.4	2195.7
53	2206.1	2216.6	2227.0	2237.5	2248.0	2258.5	2269.0	2279.6
54	2290.2	2300.8	2311.4	2322.1	2332.8	2343.5	2354.2	2365.0
55	2375.8	2386.6	2397.4	2408.3	2419.2	2430.1	2441.0	2452.0
56	2463.0	2474.0	2485.0	2496.1	2507.1	2518.3	2529.4	2540.5
57	2551.7	2562.9	2574.2	2585.4	2596.7	2608.0	2619.3	2630.7
58	2642.0	2653.4	2664.9	2676.3	2687.8	2699.3	2710.8	2722.4
59	2733.9	2745.5	2757.2	2768.8	2780.5	2792.2	2803.9	2815.6
60	2827.4	2839.2	2851.0	2862.8	2874.7	2886.6	2898.5	2910.5
61	2922.4	2934.4	2946.4	2958.5	2970.5	2982.6	2994.7	3006.9
62	3019.0	3031.2	3043.4	3055.7	3067.9	3080.2	3092.5	3104.8
63	3117.2	3129.6	3142.0	3154.4	3166.9	3179.4	3191.9	3204.4
64	3217.0	3229.5	3242.1	3254.8	3267.4	3280.1	3292.8	3305.5
65	3318.3	3331.0	3343.8	3356.7	3369.5	3382.4	3395.3	3408.2
66	3421.2	3434.1	3447.1	3460.1	3473.2	3486.3	3499.4	3512.5
67	3525.6	3538.8	3552.0	3565.2	3578.4	3591.7	3605.0	3618.3
68	3631.6	3645.0	3658.4	3671.8	3685.0	3698.7	3712.2	3725.7
69	3739.2	3752.8	3766.4	3780.0	3793.6	3807.3	3821.0	3834.7
70	3848.4	3862.2	3876.0	3889.8	3903.6	3917.4	3931.3	3945.2
71	3959.2	3973.1	3987.1	4001.1	4015.1	4029.2	4043.2	4057.3
72	4071.5	4085.6	4099.8	4114.0	4128.2	4142.5	4156.7	4171.0
73	4185.4	4199.7	4214.1	4228.5	4242.9	4257.3	4271.8	4286.3
74	4300.8	4315.3	4329.9	4344.5	4359.1	4373.8	4388.4	4403.1
75	4417.8	4432.6	4447.3	4462.1	4476.9	4491.8	4506.6	4521.5
76	4536.4	4551.4	4566.3	4581.3	4596.3	4611.3	4626.4	4641.5
77	4656.6	4671.7	4686.9	4702.1	4717.3	4732.5	4747.7	4763.0
78	4778.3	4793.7	4809.0	4824.4	4839.8	4855.2	4870.7	4886.1
79	4901.6	4917.2	4932.7	4948.3	4963.9	4979.5	4995.1	5010.8
80	5026.5	5042.2	5058.0	5073.7	5089.5	5105.4	5121.2	5137.1
81	5153.0	5168.9	5184.8	5200.8	5216.8	5232.8	5248.8	5264.9
82	5281.0	5297.1	5313.2	5329.4	5345.6	5361.8	5378.0	5394.3
83	5410.6	5426.9	5443.2	5459.6	5476.0	5492.4	5508.8	5525.3
84	5541.7	5558.2	5574.8	5591.3	5607.9	5624.5	5641.1	5657.8
85	5674.5	5691.2	5707.9	5724.6	5741.4	5758.2	5775.1	5791.9
86	5808.8	5825.7	5842.6	5859.5	5876.5	5893.5	5910.5	5927.6
87	5944.6	5961.7	5978.9	5996.0	6013.2	6030.4	6047.6	6064.8
88	6082.1	6099.4	6116.7	6134.0	6151.4	6168.8	6186.2	6203.6
89	6221.1	6238.6	6256.1	6273.6	6291.2	6308.8	6326.4	6344.0
90	6361.7	6379.4	6397.1	6414.8	6432.6	6450.4	6468.2	6486.0
91	6503.9	6521.7	6539.6	6557.6	6575.5	6593.5	6611.5	6629.5
92	6647.6	6665.7	6683.8	6701.9	6720.0	6738.2	6756.4	6774.6
93	6792.9	6811.2	6829.4	6847.8	6866.1	6884.5	6902.9	6921.3
94	6939.7	6958.2	6976.7	6995.2	7013.8	7032.3	7050.9	7069.5
95	7088.2	7106.9	7125.5	7144.3	7163.0	7181.8	7200.6	7219.4
96	7238.2	7257.1	7275.9	7294.9	7313.8	7332.8	7351.7	7370.7
97	7389.8	7408.8	7427.9	7447.0	7466.2	7485.3	7504.5	7523.7
98	7542.9	7562.2	7581.5	7600.8	7620.1	7639.5	7658.8	7678.2
99	7697.7	7717.1	7736.6	7756.1	7775.6	7795.2	7814.7	7834.3

CIRCUMFERENCES OF CIRCLES, ADVANCING BY EIGHTHS

Diam.	0	⅛	¼	⅜	½	⅝	¾	⅞
0	.0	.392	.785	1.178	1.570	1.963	2.356	2.748
1	3.141	3.534	3.927	4.319	4.712	5.105	5.497	5.890
2	6.283	6.675	7.068	7.461	7.854	8.246	8.639	9.032
3	9.424	9.817	10.210	10.602	10.995	11.388	11.781	12.173
4	12.566	12.959	13.351	13.744	14.137	14.529	14.922	15.315
5	15.708	16.100	16.493	16.886	17.278	17.671	18.064	18.456
6	18.849	19.242	19.635	20.027	20.420	20.813	21.205	21.598
7	21.991	22.383	22.776	23.169	23.562	23.954	24.347	24.740
8	25.132	25.525	25.918	26.310	26.703	27.096	27.489	27.881
9	28.274	28.667	29.059	29.452	29.845	30.237	30.630	31.023
10	31.416	31.808	32.201	32.594	32.986	33.379	33.772	34.164
11	34.557	34.950	35.343	35.735	36.128	36.521	36.913	37.306
12	37.699	38.091	38.484	38.877	39.270	39.662	40.055	40.448
13	40.840	41.233	41.626	42.018	42.411	42.804	43.197	43.589
14	43.982	44.375	44.767	45.160	45.553	45.945	46.338	46.731
15	47.124	47.516	47.909	48.302	48.694	49.087	49.480	49.873
16	50.265	50.658	51.051	51.443	51.836	52.229	52.621	53.014
17	53.407	53.799	54.192	54.585	54.978	55.370	55.763	56.156
18	56.548	56.941	57.334	57.726	58.119	58.512	58.905	59.297
19	59.690	60.083	60.475	60.868	61.261	61.653	62.046	62.439
20	62.832	63.224	63.617	64.010	64.402	64.795	65.188	65.580
21	65.973	66.366	66.759	67.151	67.544	67.937	68.329	68.722
22	69.115	69.507	69.900	70.293	70.686	71.078	71.471	71.864
23	72.256	72.649	73.042	73.434	73.827	74.220	74.613	75.005
24	75.398	75.791	76.183	76.576	76.969	77.361	77.754	78.147
25	78.540	78.932	79.325	79.718	80.110	80.503	80.896	81.288
26	81.681	82.074	82.467	82.859	83.252	83.645	84.037	84.430
27	84.823	85.215	85.608	86.001	86.394	86.786	87.179	87.572
28	87.964	88.357	88.750	89.142	89.535	89.928	90.321	90.713
29	91.106	91.499	91.891	92.284	92.677	93.069	93.462	93.855
30	94.248	94.640	95.033	95.426	95.818	96.211	96.604	96.996
31	97.389	97.782	98.175	98.567	98.960	99.353	99.745	100.138
32	100.531	100.923	101.316	101.709	102.102	102.494	102.887	103.280
33	103.672	104.065	104.458	104.850	105.243	105.636	106.029	106.421
34	106.814	107.207	107.600	107.992	108.385	108.778	109.171	109.563
35	109.956	110.349	110.741	111.134	111.527	111.919	112.312	112.705
36	113.098	113.490	113.883	114.276	114.668	115.061	115.454	115.846
37	116.239	116.632	117.025	117.417	117.810	118.203	118.595	118.988
38	119.381	119.773	120.166	120.559	120.952	121.344	121.737	122.130
39	122.522	122.915	123.308	123.700	124.093	124.486	124.879	125.271
40	125.664	126.057	126.449	126.842	127.235	127.627	128.020	128.413
41	128.806	129.198	129.591	129.984	130.376	130.769	131.162	131.554
42	131.947	132.340	132.733	133.125	133.518	133.911	134.303	134.696
43	135.089	135.481	135.874	136.267	136.660	137.052	137.445	137.838
44	138.230	138.623	139.016	139.408	139.801	140.194	140.587	140.979
45	141.372	141.765	142.157	142.550	142.943	143.335	143.728	144.120
46	144.514	144.906	145.299	145.692	146.084	146.477	146.870	147.262
47	147.655	148.048	148.441	148.833	149.226	149.619	150.011	150.404
48	150.797	151.189	151.582	151.975	152.368	152.760	153.153	153.545
49	153.938	154.881	154.724	155.116	155.509	155.902	156.295	156.687

CIRCUMFERENCES OF CIRCLES, ADVANCING BY EIGHTHS

Diam.	0	⅛	¼	⅜	½	⅝	¾	⅞
50	157.08	157.47	157.86	158.25	158.65	159.04	159.43	159.82
51	160.22	160.61	161.00	161.40	161.79	162.18	162.57	162.97
52	163.36	163.75	164.14	164.54	164.93	165.32	165.71	166.11
53	166.50	166.89	167.29	167.68	168.07	168.46	168.86	169.25
54	169.64	170.03	170.43	170.82	171.21	171.61	172.00	172.39
55	172.78	173.18	173.57	173.96	174.35	174.75	175.14	175.53
56	175.93	176.32	176.71	177.10	177.50	177.89	178.28	178.67
57	179.07	179.46	179.85	180.24	180.64	181.03	181.42	181.82
58	182.21	182.60	182.99	183.39	183.78	184.17	184.56	184.96
59	185.35	185.74	186.14	186.53	186.92	187.31	187.71	188.10
60	188.49	188.88	189.28	189.67	190.06	190.45	190.85	191.25
61	191.63	192.03	192.42	192.81	193.20	193.60	193.99	194.38
62	194.77	195.17	195.56	195.95	196.35	196.74	197.13	197.52
63	197.92	198.31	198.70	199.09	199.49	199.88	200.27	200.67
64	201.06	201.45	201.84	202.24	202.63	203.02	203.41	203.81
65	204.20	204.59	204.98	205.38	205.77	206.17	206.56	206.95
66	207.34	207.73	208.13	208.52	208.91	209.30	209.70	210.09
67	210.48	210.88	211.27	211.66	212.05	212.45	212.84	213.23
68	213.62	214.02	214.41	214.80	215.20	215.59	215.98	216.37
69	216.77	217.16	217.55	217.94	218.34	218.73	219.12	219.51
70	219.91	220.30	220.69	221.09	221.48	221.87	222.26	222.66
71	223.05	223.44	223.83	224.23	224.62	225.01	225.41	225.80
72	226.19	226.58	226.98	227.37	227.76	228.15	228.55	228.94
73	229.33	229.72	230.12	230.51	230.90	231.30	231.69	232.08
74	232.47	232.87	233.26	233.65	234.04	234.44	234.83	235.22
75	235.62	236.01	236.40	236.79	237.19	237.58	237.97	238.36
76	238.76	239.15	239.54	239.94	240.33	240.72	241.11	241.51
77	241.90	242.29	242.68	243.08	243.47	243.86	244.25	244.65
78	245.04	245.43	245.83	246.22	246.61	247.00	247.40	247.79
79	248.18	248.57	248.97	249.36	249.75	250.15	250.54	250.93
80	251.32	251.72	252.11	252.50	252.89	253.29	253.68	254.07
81	254.47	254.86	255.25	255.64	256.04	256.43	256.82	257.21
82	257.61	258.00	258.39	258.78	259.18	259.57	259.96	260.36
83	260.75	261.14	261.53	261.93	262.33	262.71	263.10	263.50
84	263.89	264.28	264.68	265.07	265.46	265.85	266.25	266.64
85	267.03	267.42	267.82	268.21	268.60	268.99	269.39	269.78
86	270.17	270.57	270.96	271.35	271.74	272.14	272.53	272.92
87	273.31	273.71	274.10	274.49	274.89	275.28	275.67	276.06
88	276.46	276.85	277.24	277.62	278.03	278.42	278.81	279.21
89	279.60	279.99	280.38	280.78	281.17	281.56	281.05	282.35
90	282.74	283.13	283.52	283.92	284.31	284.70	285.10	285.49
91	285.88	286.27	286.67	287.06	287.45	287.84	288.24	288.63
92	289.02	289.42	289.81	290.20	290.59	290.99	291.38	291.77
93	292.16	292.56	292.95	293.34	293.74	294.13	294.52	294.91
94	295.31	295.70	296.09	296.48	296.88	297.27	297.66	298.05
95	298.45	298.84	299.23	299.63	300.02	300.41	300.80	301.20
96	301.59	301.98	302.37	302.77	303.16	303.55	303.95	304.34
97	304.73	305.12	305.52	305.91	306.30	306.69	307.09	307.48
98	307.87	308.27	308.66	309.05	309.44	309.84	310.23	310.62
99	311.01	311.41	311.80	312.19	312.58	312.98	313.37	313.76

WEIGHT OF IRON, STEEL AND COPPER PLATES

IN POUNDS PER SQUARE FOOT

Thickness B. W. G.	Decimals of Inch	Iron	Steel	Copper
0000	.454	18.22	18.52	21.11
000	.425	17.05	17.34	19.76
00	.380	15.25	15.50	17.67
0	.340	13.64	13.87	15.81
1	.300	12.04	12.24	13.95
2	.284	11.40	11.59	13.20
3	.259	10.40	10.57	12.04
4	.238	9.55	9.71	11.06
5	.220	8.83	8.98	10.23
6	.203	8.15	8.28	9.44
7	.180	7.22	7.34	8.37
8	.165	6.62	6.73	7.67
9	.148	5.94	6.04	6.88
10	.134	5.38	5.47	6.23
11	.120	4.82	4.90	5.58
12	.109	4.37	4.45	5.07

Thickness Inch	Decimals of Inch	Iron	Steel	Copper
1/16	.0625	2.52	2.55	2.90
1/8	.125	5.05	5.10	5.81
3/16	.1875	7.58	7.65	8.72
1/4	.25	10.10	10.20	11.62
5/16	.3125	12.63	12.75	14.53
3/8	.375	15.16	15.30	17.44
7/16	.4375	17.68	17.85	20.34
1/2	.5	20.21	20.40	23.25
9/16	.5625	22.73	22.95	26.15
5/8	.625	25.26	25.50	29.06
11/16	.6875	27.78	28.05	31.97
3/4	.75	30.31	30.60	34.87
13/16	.8125	32.83	33.15	37.78
7/8	.875	35.37	35.70	40.68
15/16	.9375	37.89	38.25	43.59
1	1.	40.42	40.80	46.50

WEIGHTS OF ○ □ AND ⬡ STEEL BARS

PER LINEAL FOOT

SIZE	○	□	⬡	SIZE	○	□
1/16	.01043	.01328	.01150	1 1/16	3.015	3.838
3/32	.02348	.02988	.02590	1 3/16	3.767	4.794
1/8	.04172	.05312	.04602	1 5/16	4.651	5.858
5/32	.06519	.08301	.07195	1 7/16	5.519	7.025
3/16	.09393	.11953	.10361	1 11/16	7.605	9.682
7/32	.12781	.16269	.14102	1 15/16	10.024	12.760
1/4	.16687	.21250	.18420	2 1/8	12.026	15.351
9/32	.21120	.26894	.23313	2 1/4	13.517	17.212
5/16	.26097	.33203	.28782	2 7/16	15.861	20.194
11/32	.31552	.40175	.34822	2 1/2	16.687	21.250
3/8	.37572	.47812	.41445	2 3/4	20.194	25.712
13/32	.44065	.56113	.48600	2 15/16	23.042	29.330
7/16	.51123	.65078	.56407	3	24.030	30.600
15/32	.58672	.74707	.64760	3 1/4	28.202	35.912
1/2	.66750	.85000	.73680	3 7/16	31.559	40.172
9/16	.84480	1.0758	.93255	3 1/2	32.725	41.650
5/8	1.0429	1.3281	1.1513	3 3/4	37.550	47.812
11/16	1.2621	1.6070	1.3929	3 15/16	41.402	52.707
3/4	1.5029	1.9125	1.6578	4	42.720	54.400
13/16	1.7626	2.2445	1.9440	4 1/2	54.068	68.850
7/8	2.0453	2.6031	2.2563	5	66.750	85.000
15/16	2.3469	2.9883	2.5904	5 1/2	80.775	102.85
1	2.6700	3.4000	2.9472	6	96.121	122.40
1 1/8	3.3792	4.3031	3.7302	6 1/2	112.81	143.65
1 1/4	4.1717	5.3125	4.6056	7	130.90	166.60
1 3/8	5.0485	6.4281	5.5716	7 1/2	150.20	191.25
1 1/2	6.0075	7.6500	6.6312	8	170.88	217.60
1 5/8	7.0505	8.9781	7.7760	9	216.27	275.40
1 3/4	8.1812	10.4125	9.0252	10	267.00	340.00
1 7/8	9.3875	11.9531	10.3620	11	323.10	411.40
2	10.6800	13.6000	11.7900	12	384.48	489.60

For weight of IRON, multiply by .9907+; for COPPER, by 1.1336+

SOME USEFUL INFORMATION

Diameter multiplied by 3.1416=circumference.

Circumference multiplied by .3183=diameter.

Square of the diameter multiplied by .7854=area.

Doubling the diameter of a circle increases its area four times.

Area of a triangle=base multiplied by ½ the altitude.

Area of a sector of a circle=one-half the length of the arc multiplied by the radius of the circle.

Surface of a sphere=square of diameter multiplied by 3.1416.

Solidity of a sphere=cube of diameter × .5236.

Side of a square multiplied by 1.128=diameter of circle of equal area.

Diameter × .8862=side of a square of equal area.

One cubic foot of water weighs 62⅓ pounds and contains 7½ gallons.

One gallon of water (U. S. Standard) weighs 8⅓ pounds.

To find the capacity (U. S. gallons) of cylindrical tanks, square the diameter expressed in inches, multiply by the length and by .0034.

Height of a column of water in feet × .434=pressure per square inch.

Boiler horse power: The evaporation of 30 pounds of water per hour, from a temperature of 100° Fahr. into steam at 70 pounds gauge pressure.

One pound of water evaporated from and at 212° is equivalent to 965.7 British Thermal Units.

To find the number of square feet of heating surface in tubes: Multiply the number of tubes by the diameter of a tube in inches. by its length in feet, and by .2618.

To find the bursting and safe working pressure of a boiler shell: Multiply the tensile strength of material by the thickness of the plate. Then multiply the result so found by the efficiency of the joint and divide by the radius of the boiler. This will give the bursting pressure. The bursting pressure divided by the factor of safety will give the safe working pressure. The factor of safety of five has been generally accepted by eminent engineers and boilermakers.

WEIGHTS OF FLAT ROLLED STEEL PER LINEAL FOOT

WIDTH IN INCHES

Thickness	1	1¼	1½	1¾	2	2¼	2½	2¾	3	3¼	3½	3¾	4	4¼	4½	4¾	5	5¼	5½	5¾
3/16	.638	.797	.957	1.11	1.28	1.44	1.59	1.75	1.91	2.07	2.23	2.39	2.55	2.71	2.87	3.03	3.19	3.35	3.51	3.67
¼	.850	1.06	1.28	1.49	1.70	1.91	2.12	2.34	2.55	2.76	2.98	3.19	3.40	3.61	3.83	4.04	4.25	4.46	4.67	4.89
5/16	1.06	1.33	1.59	1.86	2.12	2.39	2.65	2.92	3.19	3.45	3.72	3.99	4.25	4.52	4.78	5.05	5.31	5.58	5.84	6.11
⅜	1.28	1.59	1.92	2.23	2.55	2.87	3.19	3.51	3.83	4.15	4.47	4.78	5.10	5.42	5.74	6.06	6.38	6.69	7.02	7.34
7/16	1.49	1.86	2.23	2.60	2.98	3.35	3.72	4.09	4.46	4.83	5.20	5.58	5.95	6.32	6.70	7.07	7.44	7.81	8.18	8.56
½	1.70	2.12	2.55	2.98	3.40	3.83	4.25	4.67	5.10	5.53	5.95	6.38	6.80	7.22	7.65	8.08	8.50	8.93	9.35	9.77
9/16	1.92	2.39	2.87	3.35	3.83	4.30	4.78	5.26	5.74	6.22	6.70	7.17	7.65	8.13	8.61	9.09	9.57	10.04	10.52	11.00
⅝	2.12	2.65	3.19	3.72	4.25	4.78	5.31	5.84	6.38	6.91	7.44	7.97	8.50	9.03	9.57	10.10	10.63	11.16	11.69	12.22
11/16	2.34	2.92	3.51	4.09	4.67	5.26	5.84	6.43	7.02	7.60	8.18	8.76	9.35	9.93	10.52	11.11	11.69	12.27	12.85	13.44
¾	2.55	3.19	3.83	4.47	5.10	5.75	6.38	7.02	7.65	8.29	8.93	9.57	10.20	10.84	11.48	12.12	12.75	13.39	14.03	14.67
13/16	2.76	3.45	4.14	4.84	5.53	6.21	6.90	7.60	8.29	8.98	9.67	10.36	11.05	11.74	12.43	13.12	13.81	14.50	15.19	15.88
⅞	2.98	3.72	4.47	5.20	5.95	6.69	7.44	8.18	8.93	9.67	10.41	11.16	11.90	12.65	13.39	14.13	14.87	15.62	16.36	17.10
15/16	3.19	3.99	4.78	5.58	6.38	7.18	7.97	8.77	9.57	10.36	11.16	11.95	12.75	13.55	14.34	15.14	15.94	16.74	17.53	18.33
1	3.40	4.25	5.10	5.95	6.80	7.65	8.50	9.35	10.20	11.05	11.90	12.75	13.60	14.45	15.30	16.15	17.00	17.85	18.70	19.55
1 1/16	3.61	4.52	5.42	6.32	7.22	8.13	9.03	9.93	10.84	11.74	12.65	13.55	14.45	15.35	16.26	17.16	18.06	18.96	19.87	20.77
1⅛	3.83	4.78	5.74	6.70	7.65	8.61	9.57	10.52	11.48	12.43	13.39	14.34	15.30	16.26	17.22	18.17	19.13	20.08	21.04	21.99
1 3/16	4.04	5.05	6.06	7.07	8.08	9.09	10.10	11.11	12.12	13.12	14.13	15.14	16.15	17.16	18.17	19.18	20.19	21.20	22.21	23.22
1¼	4.25	5.31	6.38	7.44	8.50	9.57	10.63	11.69	12.75	13.81	14.87	15.94	17.00	18.06	19.13	20.19	21.25	22.32	23.38	24.44
1 5/16	4.46	5.58	6.69	7.81	8.93	10.04	11.16	12.27	13.39	14.50	15.62	16.74	17.85	18.96	20.08	21.20	22.32	23.43	24.54	25.66
1⅜	4.67	5.84	7.02	8.18	9.35	10.52	11.69	12.85	14.03	15.20	16.36	17.53	18.70	19.87	21.04	22.21	23.38	24.54	25.71	26.88
1 7/16	4.89	6.11	7.34	8.56	9.78	11.00	12.22	13.44	14.66	15.88	17.10	18.33	19.55	20.77	21.99	23.22	24.44	25.66	26.88	28.10
1½	5.10	6.38	7.65	8.93	10.20	11.48	12.75	14.03	15.30	16.58	17.85	19.13	20.40	21.68	22.95	24.23	25.50	26.78	28.05	29.33

WEIGHTS OF FLAT ROLLED STEEL PER LINEAL FOOT

Thickness	WIDTH IN INCHES																			
	6	6¼	6½	6¾	7	7¼	7½	7¾	8	8¼	8½	8¾	9	9¼	9½	9¾	10	10¼	10½	10¾
3/16	3.83	3.99	4.14	4.30	4.46	4.62	4.78	4.94	5.10	5.26	5.42	5.58	5.74	5.90	6.06	6.22	6.38	6.54	6.70	6.86
¼	5.10	5.31	5.53	5.74	5.95	6.16	6.36	6.58	6.80	7.01	7.22	7.43	7.65	7.86	8.08	8.29	8.50	8.71	8.92	9.14
5/16	6.38	6.64	6.90	7.17	7.44	7.70	7.97	8.23	8.50	8.76	9.03	9.29	9.56	9.83	10.10	10.36	10.62	10.89	11.16	11.42
⅜	7.65	7.97	8.29	8.61	8.93	9.25	9.57	9.88	10.20	10.52	10.84	11.16	11.48	11.80	12.12	12.44	12.75	13.07	13.39	13.71
7/16	8.93	9.29	9.67	10.04	10.41	10.78	11.16	11.53	11.90	12.27	12.64	13.02	13.40	13.76	14.14	14.51	14.88	15.25	15.62	15.99
½	10.20	10.63	11.05	11.48	11.90	12.32	12.75	13.18	13.16	14.03	14.44	14.87	15.30	15.73	16.16	16.58	17.00	17.42	17.85	18.28
9/16	11.48	11.95	12.43	12.91	13.39	13.86	14.34	14.82	15.30	15.78	16.26	16.74	17.22	17.69	18.18	18.65	19.14	19.61	20 08	20.56
⅝	12.75	13 28	13.81	14.34	14.87	15.40	15.94	16.47	17.00	17.53	18.06	18.59	19.13	19.65	20.19	20.72	21.25	21.78	22 32	22.85
11/16	14.03	14.61	15.20	15.78	16.36	16.94	17.53	18.12	18.70	19.28	19.86	20.45	21.04	21.62	22.21	22.79	23.38	23.96	24.54	25.13
¾	15.30	15.94	16.58	17.22	17.85	18.49	19.13	19.77	20.40	21.04	21.68	22.32	22.96	23.59	24.23	24.86	25.50	26.14	26.78	27.42
13/16	16.58	17.27	17.95	18.65	19.34	20.03	20.72	21.41	22.10	22.79	23.48	24.17	24.86	25.55	26.24	26.94	27.62	28.32	29.00	29.69
⅞	17.85	18.60	19.34	20.08	20.83	21.57	22.32	23.05	23.80	24.55	25.30	26.04	26.78	27.52	28.26	29.01	29.75	30.50	31.24	31.98
15/16	19.13	19.92	20.72	21.51	22.32	23.11	23.91	24.70	25.50	26.30	27.10	27.89	28.69	29.49	30.28	31.08	31.88	32.67	33.48	34.28
1	20.40	21.25	22.10	22.95	23.80	24.65	25 50	26.35	27.20	28.05	28.90	29.75	30.60	31.45	32.30	33.15	34.00	34.85	35.70	36.55
1 1/16	21.68	22.58	23.48	24.39	25.29	26.19	27.10	28.00	28.90	29.80	30.70	31.61	32.52	33.41	34.32	35.22	36.12	37.03	37.92	38.83
1⅛	22.95	23.91	24.87	25.82	26.78	27.73	28.68	29.64	30.60	31.56	32.52	33.47	34.43	35.38	36.34	37.29	38.25	39.21	40.17	41.12
1 3/16	24.23	25 23	26.24	27.25	28.26	29.27	30.28	31.29	32.30	33.31	34.32	35.33	36.34	37.35	38.36	39.37	40.38	41.39	42.40	43.40
1¼	25.50	26.56	27.62	28.69	29.75	30.81	31.88	32.94	34.00	35.06	36.12	37.20	38.26	39.31	40.37	41.44	42.50	43.56	44.63	45.69
1 5/16	26.78	27.90	29.01	30.12	31.23	32.35	33.48	34.59	35.70	36.81	37.93	39.05	40.16	41.28	42.40	43.52	44.64	45.75	46.86	47 97
1⅜	28.05	29.22	30.39	31.56	32.72	33.89	35 06	36.23	37 40	38.57	39.74	40.91	42.08	43.25	44.41	45.58	46.75	47.92	49.08	50.25
1 7/16	29.33	30.55	31.77	32.99	34.21	35.44	36.66	37.88	39.10	40.32	41.54	42.77	44.00	45.22	46.44	47.66	48.88	50.10	51.32	52.54
1½	30.60	31.88	33.15	34.43	35.70	36.98	38.26	39.53	40.80	42.08	43.35	44.63	45.90	47.18	48.45	49.73	51.00	52.28	53.55	54.83

WEIGHTS OF FLAT ROLLED STEEL PER LINEAL FOOT

Thickness	WIDTH IN INCHES																			
	11	11¼	11½	11¾	12	12¼	12½	12¾	13	13¼	13½	13¾	14	14¼	14½	14¾	15	15¼	15½	15¾
3/16	7.02	7.17	7.32	7.49	7.66	7.82	7.98	8.13	8.28	8.44	8.60	8.76	8.92	9.08	9.24	9.40	9.56	9.72	9.87	10.04
¼	9.34	9.57	9.78	10.00	10.20	10.42	10.63	10.84	11.06	11.27	11.48	11.69	11.90	12.11	12.32	12.54	12.75	12.97	13.18	13.39
5/16	11.68	11.95	12.22	12.49	12.76	13.01	13.28	13.55	13.81	14.08	14.34	14.61	14.88	15.14	15.40	15.67	15.94	16.21	16.47	16.78
3/8	14.03	14.35	14.68	14.99	15.30	15.62	15.94	16.26	16.58	16.90	17.22	17.54	17.86	18.18	18.50	18.82	19.14	19.46	19.77	20.09
7/16	16.36	16.74	17.12	17.49	17.86	18.23	18.60	18.97	19.34	19.72	20.08	20.46	20.82	21.20	21.57	21.95	22.32	22.70	23.06	23.44
½	18.70	19.13	19.55	19.97	20.40	20.82	21.25	21.67	22.10	22.53	22.96	23.38	23.80	24.22	24.64	25.07	25.50	25.93	26.35	26.77
9/16	21.02	21.51	22.00	22.48	22.96	23.43	23.90	24.39	24.86	25.34	25.82	26.30	26.78	27.26	27.74	28.22	28.70	29.18	29.66	30.14
5/8	23.38	23.91	24.44	24.97	25.50	26.03	26.56	27.09	27.62	28.16	28.68	29.21	29.74	30.27	30.80	31.34	31.88	32.41	32.94	33.47
11/16	25.70	26.30	26.88	27.47	28.06	28.64	29.22	29.80	30.39	30.97	31.56	32.14	32.72	33.30	33.88	34.48	35.06	35.66	36.24	36.82
¾	28.05	28.68	29.33	29.97	30.60	31.25	31.88	32.52	33.16	33.80	34.44	35.07	35.71	36.35	36.98	37.63	38.26	38.90	39.54	40.17
13/16	30.40	31.08	31.76	32.46	33.15	33.83	34.53	35.22	35.91	36.60	37.29	37.98	38.67	39.36	40.05	40.74	41.43	42.12	42.81	43.50
7/8	32.72	33.47	34.21	34.95	35.70	36.44	37.19	37.93	38.68	39.42	40.16	40.90	41.65	42.40	43.14	43.88	44.62	45.36	46.10	46.85
15/16	35.06	35.86	36.66	37.46	38.25	39.05	39.84	40.64	41.44	42.24	43.03	43.83	44.63	45.43	46.22	47.02	47.82	48.61	49.41	50.21
1	37.40	38.25	39.10	39.95	40.80	41.65	42.50	43.35	44.20	45.05	45.90	46.75	47.60	48.45	49.30	50.15	51.00	51.85	52.70	53.55
1 1/16	39.74	40.64	41.54	42.45	43.35	44.25	45.16	46.06	46.96	47.87	48.77	49.67	50.57	51.47	52.38	53.29	54.20	55.10	56.00	56.89
1⅛	42.08	43.04	44.00	44.94	45.90	46.86	47.82	48.77	49.72	50.67	51.63	52.59	53.55	54.51	55.46	56.42	57.37	58.33	59.28	60.24
1 3/16	44.42	45.42	46.44	47.45	48.46	49.46	50.46	51.48	52.48	53.50	54.50	55.52	56.52	57.54	58.54	59.56	60.56	61.58	62.58	63.60
1¼	46.76	47.82	48.88	49.94	51.00	52.06	53.12	54.19	55.25	56.32	57.38	58.44	59.50	60.56	61.62	62.69	63.76	64.82	65.88	66.94
1 5/16	49.08	50.20	51.32	52.44	53.56	54.67	55.78	56.90	58.02	59.14	60.25	61.36	62.47	63.59	64.70	65.82	66.95	68.06	69.18	70.30
1⅜	51.42	52.59	53.76	54.93	56.10	57.27	58.44	59.60	60.77	61.94	63.11	64.28	65.45	66.62	67.79	68.96	70.12	71.29	72.46	73.63
1 7/16	53.76	54.99	56.21	57.43	58.65	59.87	61.10	62.32	63.54	64.76	65.98	67.20	68.42	69.65	70.88	72.10	73.32	74.54	75.76	76.98
1½	56.10	57.37	58.65	59.93	61.20	62.48	63.75	65.03	66.30	67.58	68.86	70.13	71.40	72.68	73.96	75.23	76.51	77.78	79.06	80.33

WEIGHTS OF FLAT ROLLED STEEL PER LINEAL FOOT

Thickness	WIDTH IN INCHES																			
	16	16¼	16½	16¾	17	17¼	17½	17¾	18	18¼	18½	18¾	19	19¼	19½	19¾	20	20¼	20½	20¾
3/16	10.20	10.36	10.52	10.68	10.84	11.00	11.16	11.32	11.48	11.64	11.80	11.95	12.10	12.26	12.43	12.60	12.76	12.92	13.08	13.24
¼	13.60	13.81	14.02	14.23	14.44	14.65	14.86	15.08	15.30	15.51	15.73	15.95	16.16	16.37	16.58	16.79	17.00	17.21	17.42	17.63
5/16	17.00	17.26	17.52	17.79	18.06	18.32	18.58	18.86	19.12	19.38	19.66	19.92	20.20	20.46	20.72	20.98	21.24	21.51	21.78	22.05
⅜	20.40	20.72	21.04	21.36	21.68	22.00	22.32	22.64	22.96	23.28	23.60	23.92	24.24	24.56	24.87	25.19	25.50	25.82	26.14	26.46
7/16	23.80	24.17	24.54	24.91	25.28	25.67	26.04	26.42	26.79	27.16	27.52	27.90	28.28	28.65	29.01	29.38	29.75	30.12	30.50	30.87
½	27.20	27.62	28.05	28.47	28.89	29.32	29.75	30.17	30.60	31.03	31.46	31.88	32.31	32.73	33.15	33.57	34.00	34.42	34.84	35.26
9/16	30.60	31.08	31.56	32.04	32.52	33.00	33.48	33.96	34.44	34.91	35.38	35.86	36.34	36.82	37.30	37.78	38.27	38.76	39.23	39.69
⅝	34.00	34.54	35.08	35.60	36.12	36.65	37.18	37.72	38.25	38.78	39.31	39.84	40.37	40.90	41.43	41.96	42.50	43.03	43.56	44.10
11/16	37.40	37.98	38.56	39.14	39.72	40.31	40.90	41.49	42.08	42.66	43.24	43.83	44.42	45.00	45.58	46.16	46.74	47.32	47.92	48.50
¾	40.80	41.45	42.08	42.72	43.36	44.00	44.64	45.28	45.92	46.55	47.18	47.82	48.46	49.10	49.73	50.36	51.00	51.64	52.28	52.92
13/16	44.20	44.88	45.58	46.27	46.96	47.65	48.34	49.03	49.72	50.41	51.10	51.79	52.48	53.18	53.87	54.56	55.25	55.94	56.64	57.33
⅞	47.60	48.35	49.10	49.85	50.60	51.34	52.08	52.82	53.56	54.30	55.04	55.78	56.52	57.26	58.01	58.76	59.50	60.25	61.00	61.75
15/16	51.00	51.80	52.60	53.40	54.20	55.00	55.79	56.58	57.38	58.18	58.98	59.78	60.57	61.36	62.16	62.96	63.76	64.56	65.36	66.16
1	54.40	55.25	56.10	56.95	57.80	58.65	59.50	60.35	61.20	62.05	62.90	63.75	64.60	65.45	66.30	67.15	68.00	68.85	69.70	70.55
1 1/16	57.80	58.70	59.60	60.50	61.40	62.30	63.21	64.12	65.02	65.92	66.82	67.73	68.64	69.55	70.45	71.35	72.25	73.15	74.05	74.95
1⅛	61.20	62.16	63.12	64.08	65.04	66.00	66.95	67.90	68.85	69.80	70.76	71.72	72.68	73.63	74.58	75.54	76.50	77.46	78.42	79.37
1 3/16	64.60	65.61	66.62	67.63	68.64	69.65	70.66	71.67	72.68	73.69	74.70	75.71	76.72	77.72	78.73	79.74	80.75	81.76	82.76	83.77
1¼	68.00	69.07	70.14	71.20	72.26	73.32	74.38	75.44	76.50	77.56	78.62	79.68	80.74	81.81	82.88	83.94	85.00	86.06	87.12	88.18
1 5/16	71.40	72.51	73.62	74.74	75.86	76.98	78.10	79.22	80.33	81.45	82.56	83.68	84.80	85.92	87.04	88.16	89.28	90.39	91.50	92.61
1⅜	74.80	75.97	77.14	78.31	79 48	80.64	81.81	82.98	84.15	85.32	86.49	87.66	88.83	90.00	91.17	92.33	93.50	94.67	95.84	97.01
1 7/16	78.20	79.42	80.64	81.86	83.08	84.31	85.54	86.77	88.00	89.21	90.42	91.65	92.88	94.10	95.31	96.52	97.75	98.97	100.18	101.40
1½	81.60	82.88	84.16	85.43	86.70	87.98	89.26	90.53	91.80	93.08	94.36	95.62	96.90	98.18	99.46	100.72	102.00	103.28	104.56	105.83

WEIGHTS OF FLAT ROLLED STEEL PER LINEAL FOOT

WIDTH IN INCHES

Thickness	21	21¼	21½	21¾	22	22¼	22½	22¾	23	23¼	23½	23¾	24	24¼	24½	24¾	25	25¼	25½	25¾
3/16	13.40	13.56	13.72	13.88	14.04	14.19	14.34	14.49	14.64	14.81	14.98	15.15	15.32	15.48	15.64	15.80	15.96	16.11	16.26	16.42
¼	17.84	18.06	18.28	18.48	18.69	18.91	19.13	19.34	19.56	19.78	20.00	20.20	20.40	20.62	20.84	21.05	21.26	21.47	21.68	21.90
5/16	22.32	22.58	22.84	23.10	23.36	23.63	23.90	24.18	24.44	24.71	24.98	25.25	25.52	25.78	26.03	26.29	26.56	26.83	27.10	27.36
3/8	26.78	27.10	27.42	27.74	28.06	28.38	28.70	29.03	29.36	29.67	29.98	30.29	30.60	30.92	31.24	31.56	31.88	32.20	32.52	32.84
7/16	31.24	31.61	31.98	32.35	32.72	33.10	33.48	33.86	34.24	34.62	34.98	35.35	35.72	36.09	36.46	36.83	37.20	37.57	37.94	38.31
½	35.70	36.13	36.56	36.98	37.40	37.83	38.26	38.68	39.10	39.52	39.94	40.37	40.80	41.22	41.64	42.07	42.50	42.92	43.34	43.77
9/16	40.16	40.64	41.12	41.58	42.04	42.53	43.02	43.51	44.00	44.48	44.96	45.44	45.92	46.39	46.86	47.33	47.80	48.29	48.78	49.26
5/8	44.64	45.17	45.70	46.23	46.76	47.29	47.82	48.35	48.88	49.41	49.94	50.47	51.00	51.53	52.06	52.59	53.12	53.65	54.18	54.71
11/16	49.08	49.67	50.26	50.83	51.40	52.00	52.60	53.18	53.76	54.35	54.94	55.53	56.12	56.70	57.28	57.86	58.44	59.02	59.60	60.18
¾	53.56	54.20	54.84	55.47	56.10	56.73	57.36	58.01	58.66	59.30	59.94	60.57	61.20	61.85	62.50	63.13	63.76	64.40	65.04	65.68
13/16	58.01	58.69	59.38	60.08	60.79	61.48	62.16	62.85	63.53	64.22	64.91	65.60	66.29	66.98	67.66	68.36	69.06	69.75	70.44	71.14
⅞	62.49	63.23	63.97	64.70	65.44	66.19	66.94	67.68	68.43	69.17	69.91	70.65	71.40	72.14	72.88	73.63	74.38	75.12	75.87	76.62
15/16	66.96	67.76	68.56	69.34	70.13	70.93	71.72	72.52	73.32	74.12	74.92	75.71	76.50	77.30	78.10	78.89	79.68	80.48	81.28	82.08
1	71.40	72.25	73.10	73.95	74.80	75.65	76.50	77.35	78.20	79.05	79.90	80.75	81.60	82.45	83.30	84.15	85.00	85.85	86.70	87.55
1 1/16	75.85	76.75	77.66	78.57	79.48	80.38	81.28	82.18	83.08	83.99	84.90	85.80	86.70	87.60	88.50	89.41	90.32	91.22	92.12	93.02
1 1/8	80.33	81.28	82.24	83.20	84.16	85.12	86.08	87.03	88.00	88.95	89.89	90.85	91.80	92.76	93.72	94.68	95.64	96.59	97.54	98.49
1 3/16	84.79	85.80	86.80	87.81	88.83	89.84	90.34	91.86	92.88	93.89	94.90	95.91	96.92	97.92	98.92	99.92	100.92	101.94	102.96	103.98
1¼	89.26	90.32	91.38	92.44	93.52	94.58	95.64	96.70	97.76	98.82	99.88	100.94	102.00	103.06	104.12	105.18	106.24	107.31	108.38	109.45
1 5/16	93.72	94.83	95.94	97.05	98.16	99.28	100.40	101.52	102.64	103.76	104.88	106.00	107.12	108.23	109.34	110.45	111.56	112.68	113.80	114.91
1⅜	98.17	99.34	100.50	101.67	102.84	104.01	105.18	106.35	107.52	108.69	109.86	111.03	112.20	113.37	114.54	115.71	116.88	118.04	119.20	120.37
1 7/16	102.65	103.87	105.08	106.30	107.52	108.75	109.98	111.20	112.42	113.64	114.86	116.08	117.30	118.52	119.74	120.97	122.20	123.42	124.64	125.86
1½	107.10	108.38	109.66	110.93	112.20	113.47	114.74	116.02	117.30	118.58	119.86	121.14	122.40	123.68	124.96	127.23	127.50	128.77	130.05	131.33

WEIGHTS OF FLAT ROLLED STEEL PER LINEAL FOOT

WIDTH IN INCHES

Thickness	26	26¼	26½	26¾	27	27¼	27½	27¾	28	28¼	28½	28¾	29	29¼	29½	29¾	30	30¼	30½	30¾
3/16	16.56	16.71	16.88	17.04	17.20	17.36	17.52	17.68	17.84	18.00	18.16	18.32	18.48	18.64	18.80	18.96	19.12	19.28	19.44	19.60
1/4	22.12	22.33	22.54	22.75	22.96	23.17	23.38	23.59	23.80	24.01	24.22	24.43	24.64	24.84	25.05	25.27	25.50	25.73	25.94	26.15
5/16	27.62	27.89	28.16	28.42	28.68	28.95	29.22	29.49	29.76	30.02	30.28	30.54	30.80	31.07	31.34	31.61	31.88	32.15	32.42	32.68
3/8	33.16	33.48	33.80	34.12	34.44	34.75	35.08	35.40	35.72	36.04	36.36	36.68	37.00	37.32	37.64	37.96	38.28	38.60	38.92	39.23
7/16	38.68	39.06	39.44	39.80	40.17	40.54	40.91	41.28	41.65	42.02	42.40	42.77	43.14	43.52	43.90	44.27	44.64	45.02	45.40	45.76
1/2	44.20	44.63	45.06	45.49	45.92	46.34	46.76	47.18	47.60	48.02	48.44	48.86	49.28	49.71	50.14	50.57	51.00	51.43	51.86	52.28
9/16	49.73	50.20	50.68	51.16	51.64	52.12	52.60	53.08	53.56	54.04	54.52	55.00	55.48	55.96	56.44	56.92	57.40	57.88	58.36	58.84
5/8	55.24	55.78	56.31	56.84	57.37	57.90	58.43	58.96	59.49	60.02	60.54	61.07	61.60	62.14	62.68	63.22	63.76	64.29	64.82	65.35
11/16	60.78	61.36	61.94	62.52	63.11	63.69	64.28	64.86	65.44	66.02	66.60	67.18	67.77	68.36	68.95	69.54	70.13	70.72	71.31	71.90
3/4	66.32	66.96	67.60	68.24	68.88	69.52	70.15	70.79	71.42	72.06	72.70	73.33	73.97	74.61	75.25	75.89	76.53	77.17	77.81	78.45
13/16	71.82	72.51	73.20	73.89	74.58	75.27	75.96	76.65	77.34	78.03	78.72	79.41	80.10	80.79	81.48	82.17	82.86	83.55	84.24	84.93
7/8	77.36	78.10	78.85	79.59	80.33	81.08	81.81	82.55	83.30	84.05	84.80	85.55	86.29	87.04	87.77	88.50	89.24	89.98	90.72	91.46
15/16	82.88	83.68	84.48	85.28	86.07	86.87	87.66	88.46	89.26	90.06	90.86	91.65	92.44	93.24	94.04	94.84	95.64	96.43	97.22	98.02
1	88.40	89.25	90.10	90.95	91.80	92.65	93.50	94.35	95.20	96.05	96.90	97.75	98.60	99.45	100.30	101.15	102.00	102.85	103.70	104.55
1 1/16	93.92	94.83	95.74	96.64	97.54	98.44	99.34	100.24	101.14	102.04	102.94	103.84	104.75	105.65	106.55	107.46	108.38	109.28	110.19	111.10
1 1/8	99.44	100.39	101.34	102.30	103.26	104.22	105.18	106.14	107.10	108.06	109.02	109.97	110.92	111.88	112.84	113.79	114.74	115.70	116.66	117.62
1 3/16	104.96	105.98	107.00	108.01	109.01	110.02	111.03	112.04	113.05	114.06	115.07	116.08	117.09	118.10	119.11	120.12	121.13	122.14	123.15	124.16
1 1/4	110.50	111.57	112.64	113.70	114.76	115.82	116.88	117.94	119.00	120.06	121.12	122.18	123.24	124.32	125.38	126.44	127.51	128.57	129.64	130.70
1 5/16	116.04	117.16	118.28	119.39	120.50	121.61	122.72	123.83	124.94	126.06	127.18	128.29	129.40	130.52	131.64	132.76	133.89	135.01	136.12	137.24
1 3/8	121.54	122.71	123.88	125.05	126.22	127.39	128.56	129.73	130.90	132.07	133.24	134.41	135.58	136.75	137.92	139.08	140.24	141.41	142.58	143.75
1 7/16	127.08	128.30	129.52	130.74	131.96	133.18	134.40	135.62	136.84	138.07	139.30	140.53	141.76	142.98	144.20	145.42	146.64	147.86	149.08	150.30
1 1/2	132.60	133.88	135.16	136.44	137.72	138.99	140.26	141.53	142.80	144.08	145.36	146.64	147.92	149.19	150.46	151.74	153.02	154.29	155.56	156.83

WEIGHTS OF FLAT ROLLED STEEL PER LINEAL FOOT

Thickness	WIDTH IN INCHES																				
	31	31¼	31½	31¾	32	32¼	32½	32¾	33	33¼	33½	33¾	34	34¼	34½	34¾	35	35¼	35½	35¾
3/16	19.75	19.91	20.08	20.24	20.40	20.56	20.72	20.88	21.04	21.20	21.36	21.52	21.68	21.84	22.00	22.16	22.32	23.48	22.64	22.80
¼	26.36	26.57	26.78	26.99	27.20	27.41	27.62	27.83	28.04	28.25	28.46	28.67	28.88	29.09	29.30	29.51	29.72	29.94	30.16	30.37
5/16	32.94	33.20	33.46	33.73	34.00	34.26	34.52	34.78	35.04	35.31	35.58	35.85	36.12	36.38	36.64	36.90	37.16	37.44	37.72	37.98
3/8	39.54	39.86	40.18	40.49	40.80	41.12	41.44	41.76	42.08	42.40	42.72	43.04	43.36	43.68	44.00	44.32	44.64	44.96	45.28	45.60
7/16	46.12	46.50	46.88	47.24	47.60	47.97	48.34	48.71	49.08	49.45	49.82	50.19	50.57	50.95	51.33	51.70	52.07	52.45	52.83	53.20
½	52.70	53.12	53.54	53.97	54.40	54.82	55.24	55.68	56.10	56.52	56.94	57.36	57.78	58.21	58.64	59.07	59.50	59.92	60.34	60.76
9/16	59.32	59.80	60.28	60.75	61.22	61.69	62.17	62.65	63.12	63.60	64.08	64.56	65.04	65.52	66.00	66.48	66.96	67.44	67.92	68.40
5/8	65.88	66.41	66.94	67.47	68.00	68.54	69.08	69.60	70.13	70.66	71.19	71.72	72.24	72.77	73.30	73.83	74.36	74.89	75.43	75.96
11/16	72.48	73.06	73.64	74.22	74.80	75.38	75.96	76.54	77.12	77.70	78.28	78.86	79.44	80.03	80.61	81.20	81.79	82.38	82.97	83.55
¾	79.08	79.71	80.34	80.97	81.61	82.25	82.89	83.53	84.16	84.80	85.44	86.08	86.72	87.36	88.00	88.64	89.28	89.92	90.56	91.20
13/16	85.62	86.31	87.00	87.70	88.39	89.08	80.77	90.46	91.15	91.84	92.53	93.22	93.91	94.60	95.30	95.99	96.68	97.37	98.06	98.75
7/8	92.20	92.95	93.70	94.45	95.20	95.95	96.70	97.45	98.20	98.95	99.70	100.45	101.20	101.95	102.69	103.43	104.16	104.90	105.64	106.39
15/16	98.82	99.62	100.42	101.21	102.00	102.80	103.60	104.40	105.20	106.00	106.80	107.60	108.40	109.20	110.00	110.80	111.59	112.38	113.17	113.97
1	105.40	106.25	107.10	107.95	108.80	109.65	110.50	111.35	112.20	113.05	113.90	114.75	115.60	116.45	117.30	118.15	119.00	119.85	120.70	121.55
1 1/16	112.00	112.90	113.79	114.69	115.59	116.49	117.40	118.20	119.20	120.10	121.00	121.90	122.80	123.70	124.60	125.51	126.42	127.33	128.24	129.14
1⅛	118.56	119.52	120.48	121.44	122.40	123.36	124.32	125.28	126.24	127.20	128.16	129.12	130.08	131.04	132.00	132.95	133.90	134.85	135.80	136.75
1 3/16	125.16	126.18	127.20	128.21	129.21	130.22	131.22	132.23	133.24	134.25	135.26	136.27	137.28	138.29	139.30	140.31	141.32	142.33	143.34	144.35
1¼	131.76	132.82	133.88	134.94	136.00	137.07	138.14	139.21	140.28	141.34	142.40	143.46	144.52	145.58	146.64	147.70	148.76	149.82	150.88	151.94
1 5/16	138.36	139.48	140.60	141.70	142.81	143.92	145.02	146.13	147.24	148.36	149.48	150.60	151.72	152.84	153.96	155.08	156.20	157.32	158.44	159.56
1⅜	144.92	146.09	147.26	148.43	149.60	150.77	151.94	153.11	154.28	155.45	156.62	157.79	158.96	160.12	161.28	162.45	163.62	164.79	165.96	167.13
1 7/16	151.52	152.74	153.96	155.18	156.40	157.62	158.84	160.06	161.28	162.50	163.72	164.94	166.16	167.39	168.62	169.85	171.08	172.31	173.54	174.77
1½	158.11	159.38	160.66	161.93	163.20	164.47	165.76	167.04	168.32	169.59	170.86	172.13	173.40	174.68	175.95	177.23	178.51	179.78	181.06	182.33

WEIGHTS OF FLAT ROLLED STEEL PER LINEAL FOOT

WIDTH IN INCHES

Thickness	36	36¼	36½	36¾	37	37¼	37½	37¾	38	38¼	38½	38¾	39	39¼	39½	39¾	40	40¼	40½	40¾
3/16	22.96	23.12	23.28	23.44	23.60	23.76	23.90	24.04	24.20	24.36	24.52	24.69	24.86	25.03	25.20	25.36	25.52	25.68	25.84	26.00
1/4	30.59	30.81	31.02	31.24	31.46	31.68	31.90	32.11	32.32	32.53	32.74	32.95	33.16	33.37	33.58	33.79	34.00	34.21	34.42	34.63
5/16	38.24	38.50	38.76	39.03	39.31	39.57	39.84	40.11	40.39	40.65	40.92	41.18	41.44	41.70	41.96	42.22	42.48	42.74	43.01	43.28
3/8	45.92	46.24	46.56	46.88	47.20	47.52	47.84	48.16	48.48	48.80	49.12	49.43	49.74	50.06	50.38	50.69	51.00	51.32	51.64	51.96
7/16	53.58	53.95	54.32	54.68	55.04	55.42	55.80	56.18	56.56	56.93	57.30	57.66	58.02	58.39	58.76	59.13	59.50	59.87	60.24	60.62
1/2	61.20	61.63	62.06	62.49	62.92	63.34	63.76	64.19	64.62	65.04	65.46	65.88	66.30	66.72	67.14	67.56	68.00	68.42	68.84	69.26
9/16	68.88	69.36	69.82	70.29	70.76	71.24	71.72	72.20	72.68	73.16	73.64	74.12	74.60	75.08	75.56	76.05	76.54	77.03	77.52	78.00
5/8	76.50	77.03	77.56	78.09	78.62	79.15	79.68	80.21	80.74	81.27	81.80	82.33	82.86	83.39	83.92	84.46	85.00	85.53	86.06	86.59
11/16	84.15	84.74	85.32	85.90	86.48	87.07	87.66	88.25	88.84	89.42	90.00	90.58	91.16	91.75	92.34	92.91	93.48	94.06	94.64	95.23
3/4	91.84	92.47	93.10	93.73	94.36	95.00	95.64	96.28	96.92	97.56	98.20	98.83	99.46	100.09	100.72	101.36	102.00	102.64	103.28	103.92
13/16	99.44	100.13	100.82	101.51	102.20	102.89	103.58	104.27	104.96	105.66	106.36	107.05	107.74	108.43	109.12	109.81	110.50	111.19	111.88	112.58
7/8	107.12	107.86	108.60	109.34	110.08	110.82	111.56	112.30	113.04	113.78	114.52	115.27	116.02	116.77	117.52	118.26	119.00	119.75	120.50	121.25
15/16	114.76	115.56	116.36	117.16	117.96	118.76	119.56	120.35	121.14	121.93	122.72	123.52	124.32	125.12	125.92	126.72	127.52	128.32	129.12	129.92
1	122.40	123.25	124.10	124.95	125.80	126.65	127.50	128.35	129.20	130.05	130.90	131.75	132.60	133.45	134.30	135.15	136.00	136.85	137.70	138.55
1 1/16	130.04	130.94	131.84	132.74	133.64	134.55	135.46	136.37	137.28	138.19	139.10	140.00	140.90	141.80	142.70	143.60	144.50	145.40	146.30	147.20
1 1/8	137.70	138.65	139.60	140.56	141.52	142.48	143.44	144.40	145.36	146.31	147.26	148.21	149.16	150.12	151.08	152.04	153.00	153.96	154.92	155.88
1 3/16	145.36	146.37	147.38	148.39	149.40	150.41	151.42	152.43	153.44	154.44	155.44	156.46	157.46	158.47	159.48	160.49	161.50	162.51	163.52	164.53
1 1/4	153.00	154.06	155.12	156.18	157.24	158.30	159.36	160.42	161.48	162.54	163.62	164.69	165.76	166.82	167.88	168.94	170.00	171.06	172.12	173.18
1 5/16	160.66	161.78	162.90	164.01	165.12	166.24	167.36	168.48	169.60	170.72	171.84	172.96	174.08	175.20	176.32	177.44	178.56	179.67	180.78	181.90
1 3/8	168.30	169.47	170.64	171.81	172.98	174.15	175.32	176.49	177.66	178.83	180.00	181.17	182.34	183.50	184.66	185.83	187.00	188.17	189.34	190.51
1 7/16	176.00	177.21	178.42	179.63	180.85	182.07	183.20	184.52	185.75	186.97	188.20	189.42	190.63	191.84	193.05	194.27	195.50	196.72	197.94	199.16
1 1/2	183.60	184.88	186.16	187.44	188.72	190.00	191.25	192.52	193.80	195.08	196.36	197.64	198.92	200.18	201.44	202.72	204.00	205.28	206.56	207.84

WEIGHTS OF FLAT ROLLED STEEL PER LINEAL FOOT

Thickness	WIDTH IN INCHES																				
	41	41¼	41½	41¾	42	42¼	42½	42¾	43	43¼	43½	43¾	44	44¼	44½	44¾	45	45¼	45½	45¾
3/16	26.16	26.32	26.48	26.64	26.80	26.96	27.12	27.28	27.44	27.60	27.76	27.92	28.08	28.23	28.38	28.53	28.68	28.83	28.98	29.14
¼	34.84	35.05	35.26	35.47	35.68	35.90	36.12	36.34	36.56	36.76	36.96	37.17	37.38	37.60	37.82	38.04	38.26	38.47	38.68	38.89
5/16	43.55	43.82	44.09	44.36	44.64	44.90	45.16	45.42	45.68	45.94	46.20	46.46	46.72	46.99	47.26	47.53	47.80	48.07	48.35	48.62
3/8	52.28	52.60	52.92	53.24	53.56	53.88	54.20	54.52	54.84	55.16	55.48	55.80	56.12	56.44	56.76	57.08	57.40	57.73	58.06	58.38
7/16	61.00	61.37	61.74	62.11	62.48	62.85	63.22	63.59	63.96	64.33	64.70	65.07	65.44	65.82	66.20	66.58	66.96	67.34	67.72	68.10
½	69.68	70.10	70.52	70.96	71.40	71.83	72.26	72.69	73.12	73.54	73.96	74.38	74.80	75.23	75.66	76.09	76.52	76.94	77.36	77.78
9/16	78.46	78.92	79.38	79.85	80.32	80.80	81.28	81.76	82.24	82.70	83.16	83.62	84.09	84.57	85.05	85.54	86.03	86.52	87.01	87.51
5/8	87.12	87.66	88.20	88.74	89.28	89.81	90.34	90.87	91.40	91.93	92.46	92.99	93.52	94.05	94.58	95.11	95.64	96.17	96.70	97.23
11/16	95.83	96.41	97.00	97.58	98.16	98.75	99.34	99.93	100.52	101.09	101.66	102.23	102.81	103.40	104.00	104.60	105.19	105.78	106.37	106.96
¾	104.56	105.20	105.84	106.48	107.12	107.76	108.40	109.04	109.68	110.31	110.94	111.57	112.20	112.83	113.46	114.09	114.73	115.37	116.01	116.65
13/16	113.28	113.97	114.66	115.34	116.02	116.70	117.38	118.07	118.76	119.46	120.16	120.86	121.56	122.26	122.96	123.65	124.33	125.02	125.71	126.39
7/8	122.00	122.75	123.50	124.24	124.98	125.73	126.47	127.21	127.94	128.67	129.41	130.15	130.89	131.63	132.38	133.13	133.88	134.62	135.36	136.10
15/16	130.72	131.52	132.32	133.12	133.92	134.72	135.52	136.32	137.11	137.90	138.69	139.48	140.27	141.06	141.86	142.65	143.44	144.24	145.04	145.84
1	139.40	140.25	141.10	141.95	142.80	143.65	144.50	145.35	146.20	147.05	147.90	148.75	149.60	150.45	151.30	152.15	153.00	153.85	154.70	155.55
1 1/16	148.10	149.00	149.90	150.80	151.70	152.60	153.50	154.41	155.32	156.23	157.14	158.05	158.96	159.86	160.76	161.66	162.56	163.46	164.36	165.26
1⅛	156.84	157.79	158.74	159.70	160.66	161.61	162.56	163.52	164.48	165.44	166.40	167.36	168.32	169.28	170.24	171.20	172.16	173.11	174.06	175.02
1 3/16	165.53	166.54	167.54	168.56	169.58	170.59	171.60	172.60	173.60	174.61	175.62	176.64	177.66	178.67	179.68	180.68	181.68	182.70	183.72	184.74
1¼	174.24	175.30	176.36	177.44	178.52	179.58	180.64	181.70	182.76	183.82	184.88	185.96	187.04	188.10	189.16	190.22	191.28	192.34	193.40	194.46
1 5/16	183.00	184.11	185.22	186.33	187.44	188.55	189.66	190.77	191.88	192.99	194.10	195.21	196.32	197.44	198.56	199.68	200.80	201.92	203.04	204.16
1⅜	191.68	192.85	194.02	195.18	196.34	197.51	198.68	199.84	201.00	202.17	203.34	204.51	205.68	206.85	208.02	209.19	210.36	211.53	212.70	213.87
1 7/16	200.37	201.59	202.81	204.05	205.29	206.52	207.75	208.96	210.17	211.38	212.60	213.82	215.04	216.27	217.50	218.73	219.96	221.18	222.40	223.62
1½	209.12	210.39	211.66	212.93	214.20	215.48	216.76	218.04	219.32	220.59	221.86	223.13	224.40	225.67	226.94	228.21	229.48	230.76	232.04	233.32

WEIGHTS OF FLAT ROLLED STEEL PER LINEAL FOOT

Thickness	WIDTH IN INCHES																				
	46	46¼	46½	46¾	47	47¼	47½	47¾	48	48¼	48½	48¾	49	49¼	49½	49¾	50	50¼	50½	50¾
5/16	29.29	29.45	29.62	29.79	29.96	30.13	30.30	30.47	30.64	30.80	30.96	31.12	31.28	31.44	31.60	31.76	31.92	32.07	32.22	32.38
3/8	39.11	39.33	39.55	39.77	39.99	40.20	40.40	40.60	40.80	41.02	41.24	41.46	41.68	41.89	42.10	42.31	42.52	42.73	42.94	43.15
7/16	48.88	49.15	49.42	49.69	49.96	50.23	50.50	50.77	51.04	51.30	51.56	51.81	52.06	52.32	52.58	52.85	53.12	53.39	53.66	53.93
9/16	58.71	59.02	59.34	59.65	59.96	60.27	60.58	60.89	61.20	61.52	61.84	62.16	62.48	62.80	63.12	63.44	63.76	64.08	64.40	64.72
5/8	68.47	68.85	69.23	69.59	69.96	70.33	70.70	71.07	71.44	71.81	72.18	72.55	72.92	73.29	73.66	74.03	74.40	74.77	75.12	75.51
½	78.20	78.62	79.04	79.46	79.88	80.31	80.74	81.17	81.60	82.02	82.44	82.86	83.28	83.71	84.14	84.57	85.00	85.42	85.84	86.26
9/16	88.00	88.48	88.96	89.44	89.92	90.40	90.88	91.36	91.84	92.31	92.78	93.25	93.72	94.19	94.66	95.13	95.60	96.09	96.58	97.06
5/8	97.76	98.29	98.82	99.35	99.88	100.41	100.94	101.47	102.00	102.53	103.06	103.59	104.12	104.65	105.18	105.71	106.24	106.77	107.30	107.83
11/16	107.53	108.11	108.70	109.29	109.88	110.47	111.06	111.65	112.24	112.82	113.40	113.98	114.56	115.14	115.72	116.30	116.88	117.46	118.04	118.62
11/16	117.31	117.95	118.60	119.24	119.88	120.51	121.14	121.77	122.40	123.05	123.70	124.35	125.00	125.63	126.26	126.89	127.52	128.16	128.80	129.44
13/16	127.06	127.75	128.44	129.13	129.82	130.51	131.20	131.89	132.58	133.27	133.96	134.64	135.32	136.02	136.72	137.42	138.12	138.81	139.50	140.19
7/8	136.86	137.60	138.34	139.08	139.82	140.56	141.30	142.05	142.80	143.54	144.28	145.02	145.76	146.51	147.26	148.01	148.76	149.50	150.24	150.99
15/16	146.64	147.44	148.24	149.04	149.84	150.63	151.42	152.21	153.00	153.80	154.60	155.40	156.20	156.99	157.78	158.57	159.36	160.16	160.96	161.76
1	156.40	157.25	158.10	158.95	159.80	160.65	161.50	162.35	163.20	164.05	164.90	165.75	166.60	167.45	168.30	169.15	170.00	170.85	171.70	172.55
1 1/16	166.16	167.07	167.98	168.89	169.80	170.70	171.60	172.50	173.40	174.30	175.20	176.10	177.00	177.91	178.82	179.73	180.64	181.54	182.44	183.34
1⅛	175.99	176.94	177.90	178.84	179.78	180.74	181.70	182.65	183.60	184.56	185.52	186.48	187.44	188.40	189.36	190.32	191.28	192.23	193.18	194.13
1 3/16	185.76	186.77	187.78	188.79	189.80	190.81	191.82	192.83	193.84	194.84	195.84	196.84	197.84	198.84	199.84	200.84	201.84	202.85	203.87	204.89
1¼	195.52	196.58	197.64	198.70	199.76	200.82	201.88	202.94	204.00	205.06	206.12	207.18	208.24	209.30	210.36	211.42	212.48	213.55	214.62	215.69
1 5/16	205.28	206.40	207.52	208.64	209.76	210.88	212.00	213.12	214.24	215.35	216.46	217.57	218.68	219.79	220.90	222.01	223.12	224.24	225.36	226.48
1⅜	215.04	216.21	217.38	218.55	219.72	220.89	222.06	223.23	224.40	225.57	226.74	227.91	229.08	230.25	231.42	232.59	233.76	234.91	236.08	237.25
1 7/16	224.84	226.06	227.28	228.50	229.72	230.94	232.16	233.38	234.60	235.82	237.04	238.26	239.48	240.71	241.94	243.17	244.40	245.62	246.84	248.06
1½	234.60	235.88	237.16	238.44	239.72	241.00	242.28	243.54	244.80	246.08	247.36	248.64	249.92	251.19	252.46	253.73	255.00	256.27	257.54	258.81

WEIGHTS OF FLAT ROLLED STEEL PER LINEAL FOOT

WIDTH IN INCHES

Thickness	51	51¼	51½	51¾	52	52¼	52½	52¾	53	53¼	53½	53¾	54	54¼	54½	54¾	55	55¼	55½	55¾
3/16	32.52	32.68	32.84	32.98	33.12	33.27	33.42	33.59	33.76	33.92	34.08	34.24	34.40	34.56	34.72	34.88	35.04	35.20	35.36	35.52
¼	43.36	43.58	43.80	44.02	44.24	44.45	44.66	44.87	45.08	45.29	45.50	45.71	45.92	46.13	46.34	46.55	46.76	46.97	47.18	47.39
5/16	54.20	54.46	54.72	54.98	55.24	55.51	55.78	56.05	56.32	56.58	56.84	57.10	57.36	57.63	57.90	58.17	58.44	58.71	58.98	59.24
3/8	65.04	65.36	65.68	66.00	66.32	66.64	66.96	67.28	67.60	67.92	68.24	68.56	68.88	69.19	69.51	69.83	70.15	70.47	70.79	71.12
7/16	75.88	76.25	76.62	76.99	77.37	77.75	78.12	78.50	78.88	79.24	79.60	79.97	80.34	80.71	81.08	81.45	81.82	82.19	82.56	82.93
½	86.68	87.11	87.54	87.97	88.40	88.83	89.26	89.69	90.12	90.55	90.98	91.41	91.84	92.26	92.64	93.10	93.52	93.94	94.36	94.78
9/16	97.56	98.05	98.54	99.00	99.46	99.93	100.40	100.88	101.36	101.84	102.32	102.80	103.28	103.76	104.24	104.72	105.20	105.68	106.16	106.64
5/8	108.36	108.89	109.42	109.95	110.48	111.02	111.56	112.09	112.62	113.15	113.68	114.21	114.74	115.27	115.80	116.33	116.86	117.39	117.92	118.45
11/16	119.20	119.78	120.36	120.96	121.56	122.14	122.72	123.30	123.88	124.46	125.04	125.63	126.22	126.80	127.38	127.97	128.56	129.14	129.72	130.30
¾	130.08	130.72	131.36	132.00	132.64	133.28	133.92	134.56	135.20	135.84	136.48	137.12	137.76	138.40	139.04	139.67	140.30	140.94	141.58	142.22
13/16	140.88	141.58	142.28	142.96	143.64	144.33	145.02	145.71	146.40	147.09	147.78	148.47	149.16	149.85	150.54	151.23	151.92	152.61	153.30	153.99
7/8	151.74	152.49	153.24	153.98	154.72	155.46	156.20	156.95	157.70	158.44	159.18	159.92	160.66	161.41	162.16	162.89	163.63	164.36	165.10	165.85
15/16	162.56	163.36	164.16	164.96	165.76	166.56	167.36	168.16	168.96	169.76	170.56	171.36	172.15	172.95	173.74	174.53	175.32	176.12	176.92	177.72
1	173.40	174.25	175.10	175.95	176.80	177.65	178.50	179.35	180.20	181.05	181.90	182.75	183.60	184.45	185.30	186.15	187.00	187.85	188.70	189.55
1 1/16	184.24	185.14	186.04	186.94	187.84	188.75	189.66	190.57	191.48	192.38	193.28	194.18	195.08	195.98	196.88	197.78	198.68	199.58	200.48	201.38
1⅛	195.08	196.03	196.98	197.93	198.88	199.83	200.78	201.73	202.68	203.64	204.60	205.56	206.52	207.48	208.44	209.40	210.36	211.32	212.28	213.24
1 3/16	205.91	206.93	207.95	208.93	209.92	210.94	211.96	212.98	214.00	215.01	216.02	217.02	218.02	219.03	220.04	221.05	222.06	223.07	224.08	225.09
1¼	216.76	217.83	218.90	219.95	221.00	222.07	223.14	224.21	225.28	226.34	227.40	228.46	229.52	230.58	231.64	232.70	233.76	234.82	235.88	236.94
1 5/16	227.60	228.71	229.82	230.95	232.08	233.20	234.32	235.44	236.56	237.67	238.78	239.89	241.00	242.11	243.22	244.33	245.44	246.55	247.66	248.77
1⅜	238.41	239.58	240.74	241.91	243.08	244.25	245.42	246.59	247.76	248.93	250.10	251.27	252.44	253.61	254.78	255.95	257.12	258.29	259.46	260.63
1 7/16	249.28	250.50	251.72	252.94	254.16	255.38	256.60	257.82	259.04	260.26	261.48	262.70	263.92	265.14	266.36	267.58	268.80	270.02	271.24	272.46
1½	260.10	261.38	262.66	263.93	265.20	266.48	267.76	269.04	270.32	271.60	272.88	274.16	275.44	276.71	277.98	279.25	280.52	281.79	283.06	284.33

WEIGHTS OF FLAT ROLLED STEEL PER LINEAL FOOT

Thickness	WIDTH IN INCHES																			
	56	56¼	56½	56¾	57	57¼	57½	57¾	58	58¼	58½	58¾	59	59¼	59½	59¾	60	60¼	60½	60¾
3/16	35.68	35.84	36.00	36.16	36.32	36.48	36.64	36.80	36.96	37.12	37.28	37.44	37.60	37.76	37.92	38.08	38.24	38.40	38.56	38.72
¼	47.60	47.81	48.02	48.23	48.44	48.65	48.86	49.07	49.28	49.48	49.68	49.89	50.10	50.31	50.54	50.77	51.00	51.23	51.46	51.68
5/16	59.51	59.78	60.04	60.30	60.56	60.82	61.08	61.34	61.60	61.87	62.14	62.41	62.68	62.95	63.22	63.49	63.76	64.03	64.30	64.57
⅜	71.44	71.76	72.08	72.40	72.72	73.04	73.36	73.68	74.00	74.32	74.64	74.96	75.28	75.60	75.92	76.24	76.56	76.88	77.20	77.52
7/16	83.30	83.67	84.04	84.42	84.80	85.17	85.54	85.91	86.28	86.66	87.04	87.42	87.80	88.17	88.54	88.91	89.28	89.65	90.04	90.42
½	95.20	95.62	96.04	96.46	96.88	97.30	97.72	98.14	98.56	98.99	99.42	99.85	100.28	100.71	101.14	101.57	102.00	102.43	102.86	103.29
9/16	107.12	107.60	108.08	108.56	109.04	109.52	110.00	110.48	110.96	111.44	111.92	112.40	112.88	113.36	113.84	114.32	114.80	115.28	115.76	116.24
⅝	118.98	119.51	120.04	120.56	121.08	121.61	122.14	122.67	123.20	123.74	124.28	124.82	125.36	125.90	126.44	126.98	127.52	128.05	128.58	129.11
11/16	130.88	131.46	132.04	132.62	133.20	133.78	134.36	134.95	135.54	136.13	136.72	137.31	137.90	138.49	139.08	139.67	140.26	140.85	141.44	142.03
¾	142.85	143.48	144.12	144.76	145.40	146.03	146.66	147.30	147.94	148.58	149.22	149.86	150.50	151.14	151.78	152.42	153.06	154.70	155.34	155.98
13/16	154.68	155.37	156.06	156.75	157.44	158.13	158.82	159.51	160.20	160.89	161.58	162.27	162.96	163.65	164.34	165.03	165.72	166.41	167.10	167.79
⅞	166.60	167.35	168.10	168.85	169.60	170.35	171.10	171.84	172.58	173.33	174.08	174.81	175.54	176.27	177.01	177.75	178.48	179.22	179.96	180.70
15/16	178.52	179.32	180.12	180.92	181.72	182.51	183.30	184.09	184.88	185.68	186.48	187.28	188.08	188.88	189.68	190.48	191.28	192.07	192.86	193.65
1	190.40	191.25	192.10	192.95	193.80	194.65	195.50	196.35	197.20	198.05	198.90	199.75	200.60	201.45	202.30	203.15	204.00	204.85	205.70	206.55
1 1/16	202.28	203.18	204.08	204.98	205.88	206.78	207.68	208.59	209.50	210.40	211.30	212.20	213.10	214.01	214.92	215.84	216.76	217.66	218.56	219.47
1⅛	214.20	215.16	216.12	217.08	218.04	218.99	219.94	220.89	221.84	222.80	223.76	224.72	225.68	226.63	227.58	228.53	229.48	230.44	231.40	232.35
1 3/16	226.10	227.11	228.12	229.13	230.14	231.15	232.16	233.17	234.18	235.19	236.20	237.21	238.22	239.23	240.24	241.25	242.26	243.27	244.28	245.29
1¼	238.00	239.06	240.12	241.18	242.24	243.30	244.36	245.42	246.48	247.56	248.64	249.70	250.76	251.82	252.88	253.95	255.02	256.08	257.14	258.21
1 5/16	249.88	251.00	252.12	253.24	254.36	255.47	256.58	257.69	258.80	260.02	261.04	262.16	263.28	264.40	265.52	266.65	267.78	268.90	270.02	271.14
1⅜	261.80	262.97	264.14	265.31	266.48	267.65	268.82	269.99	271.16	272.33	273.50	274.67	275.84	277.00	278.16	279.32	280.48	281.65	282.82	283.99
1 7/16	273.68	274.91	276.14	277.37	278.60	279.83	281.06	282.29	283.52	284.74	285.96	287.18	288.40	289.62	290.84	292.06	293.28	294.50	295.72	296.94
1½	285.60	286.88	288.16	289.44	290.72	292.00	293.28	294.56	295.84	297.11	298.38	299.65	300.92	301.20	303.48	304.76	306.04	307.31	308.58	309.86

WEIGHTS OF FLAT ROLLED STEEL PER LINEAL FOOT

Thickness	WIDTH IN INCHES																			
	61	61¼	61½	61¾	62	62¼	62½	62¾	63	63¼	63½	63¾	64	64¼	64½	64¾	65	65¼	65½	65¾
3/16	38.88	39.04	39.20	39.35	39.50	39.66	39.82	39.99	40.16	40.32	40.48	40.64	40.80	40.96	41.12	41.28	41.44	41.60	41.76	41.92
¼	51.88	52.09	52.30	52.51	52.72	52.93	53.14	53.35	53.56	53.77	53.98	54.19	54.40	54.61	54.82	55.03	55.24	55.45	55.66	55.87
5/16	64.84	65.10	65.36	65.62	65.88	66.14	66.40	66.66	66.92	67.19	67.46	67.73	68.00	68.26	68.52	68.78	69.04	69.30	69.56	69.82
3/8	77.84	78.15	78.46	78.77	79.08	79.40	79.72	80.04	80.36	80.67	80.98	81.29	81.60	81.92	82.24	82.56	82.88	83.20	83.52	83.84
7/16	90.80	91.16	91.52	91.88	92.24	92.62	93.00	93.38	93.75	94.12	94.48	94.84	95.20	95.57	95.94	96.31	96.68	97.05	97.42	97.79
½	103.72	104.14	104.56	104.98	105.40	105.82	106.24	106.66	107.08	107.51	107.94	108.33	108.80	109.22	109.64	110.06	110.49	110.92	111.35	111.77
9/16	116.72	117.20	117.68	118.16	118.64	119.12	119.60	120.08	120.56	121.03	121.50	121.97	122.44	122.91	123.38	123.86	124.34	124.82	125.30	125.78
5/8	129.64	130.17	130.70	131.23	131.76	132.29	132.82	133.35	133.88	134.41	134.94	135.47	136.00	136.54	137.08	137.62	138.16	138.68	139.20	139.73
11/16	142.62	143.21	143.80	144.38	144.96	145.54	146.12	146.70	147.28	147.86	148.44	149.02	149.60	150.18	150.76	151.34	151.92	152.50	153.08	153.64
¾	155.62	156.26	156.90	157.53	158.16	158.79	159.42	160.05	160.68	161.31	161.94	162.58	163.22	163.86	164.50	165.14	165.78	166.42	167.06	167.70
13/16	168.48	169.17	169.86	170.55	171.24	171.93	172.62	173.31	174.00	174.70	175.40	176.09	176.78	177.47	178.16	178.85	179.54	180.23	180.92	181.61
7/8	181.44	182.18	182.92	183.66	184.40	185.15	185.90	186.65	187.40	188.15	188.90	189.65	190.40	191.15	191.90	192.65	193.40	194.15	194.90	195.65
15/16	194.44	195.22	196.04	196.84	197.64	198.44	199.24	200.04	200.84	201.64	202.43	203.22	204.01	204.81	205.60	206.40	207.20	208.00	208.80	209.60
1	207.40	208.25	209.10	209.95	210.80	211.65	212.50	213.35	214.20	215.05	215.90	216.75	217.60	218.45	219.30	220.15	221.00	221.85	222.70	223.55
1 1/16	220.38	221.29	222.20	223.10	224.00	224.90	225.80	226.69	227.58	228.48	229.38	230.28	231.18	232.08	232.98	233.89	234.80	235.70	236.60	237.50
1 1/8	233.32	234.28	235.24	236.18	237.12	238.08	239.04	240.00	240.96	241.92	242.88	243.84	244.80	245.76	246.72	247.68	248.64	249.60	250.56	251.52
1 3/16	246.30	247.31	248.32	249.32	250.32	251.34	252.36	253.38	254.40	255.41	256.42	257.42	258.42	259.43	260.44	261.44	262.44	263.45	264.46	265.47
1¼	259.28	260.34	261.40	262.46	263.52	264.58	265.64	266.70	267.76	268.82	269.88	270.94	272.00	273.07	274.14	275.21	276.28	277.35	278.42	279.48
1 5/16	272.24	273.36	274.48	275.60	276.72	277.84	278.96	280.08	281.20	282.30	283.40	284.51	285.62	286.73	287.84	288.94	290.04	291.15	292.26	293.38
1⅜	285.16	286.33	287.50	288.67	289.84	291.01	292.18	293.35	294.52	295.69	296.86	298.03	299.20	300.37	301.54	302.71	303.88	305.05	306.22	307.39
1 7/16	298.16	299.38	300.60	301.82	303.04	304.26	305.48	306.70	307.92	309.14	310.36	311.58	312.80	314.02	315.24	316.46	317.68	318.90	320.12	321.34
1½	311.12	312.39	313.66	314.94	316.22	317.49	318.76	320.04	321.32	322.59	323.86	325.13	326.40	327.67	328.94	330.23	331.52	332.80	334.08	335.35

WEIGHTS OF FLAT ROLLED STEEL PER LINEAL FOOT

Thickness	WIDTH IN INCHES																			
	66	66¼	66½	66¾	67	67¼	67½	67¾	68	68¼	68½	68¾	69	69¼	69½	69¾	70	70¼	70½	70¾
3/16	42.08	42.24	42.40	42.56	42.72	42.88	43.04	43.20	43.36	43.52	43.68	43.84	44.00	44.16	44.32	44.48	44.64	44.80	44.96	45.12
¼	56.08	56.29	56.50	56.71	56.92	57.13	57.34	57.55	57.76	57.97	58.18	58.39	58.60	58.81	59.02	59.23	59.44	59.66	59.88	60.10
5/16	70.08	70.35	70.62	70.89	71.16	71.43	71.70	71.97	72.24	72.50	72.76	73.02	73.28	73.54	73.80	74.06	74.32	74.59	74.88	75.15
⅜	84.16	84.48	84.80	85.12	85.44	85.76	86.08	86.40	86.72	87.04	87.36	87.68	88.00	88.32	88.64	88.96	89.28	89.60	89.92	90.24
7/16	98.16	98.53	98.90	99.27	99.64	100.01	100.38	100.76	101.14	101.52	101.90	102.28	102.66	103.03	103.40	103.77	104.14	104.52	104.90	105.27
½	112.20	112.62	113.04	113.46	113.88	114.30	114.72	115.14	115.56	115.99	116.42	116.85	117.28	117.71	118.14	118.57	119.00	119.42	119.84	120.26
9/16	126.24	126.72	127.20	127.68	128.16	128.64	129.12	129.60	130.08	130.56	131.04	131.52	132.00	132.48	132.96	133.44	133.92	134.40	134.88	135.36
⅝	140.26	140.79	141.32	141.85	142.38	142.91	143.44	143.96	144.48	145.01	145.54	146.07	146.60	147.13	147.66	148.19	148.72	149.25	149.78	150.32
11/16	154.24	154.82	155.40	155.98	156.56	157.14	157.72	158.30	158.88	159.47	160.06	160.64	161.22	161.81	162.40	162.99	163.58	164.17	164.76	165.35
¾	168.32	168.96	169.60	170.24	170.88	171.52	172.16	172.80	173.44	174.08	174.72	175.36	176.00	176.64	177.28	177.92	178.56	179.20	179.84	180.48
13/16	182.30	182.99	183.68	184.37	185.06	185.75	186.44	187.13	187.82	188.51	189.20	189.90	190.60	191.29	191.98	192.67	193.36	194.05	194.74	195.43
⅞	196.40	197.15	197.90	198.65	199.40	200.15	200.90	201.65	202.40	203.15	203.90	204.64	205.38	206.12	206.86	207.59	208.32	209.06	209.80	210.55
15/16	210.40	211.20	212.00	212.80	213.60	214.40	215.20	216.00	216.80	217.60	218.40	219.20	220.00	220.80	221.60	222.39	223.18	223.97	224.76	225.55
1	224.40	225.25	226.10	226.95	227.80	228.65	229.50	230.35	231.20	232.05	232.90	233.75	234.60	235.45	236.30	237.15	238.00	238.85	239.70	240.55
1 1/16	238.40	239.30	240.20	241.10	242.00	242.90	243.80	244.70	245.60	246.50	247.40	248.30	249.20	250.11	251.02	251.92	252.84	253.75	254.66	255.56
1⅛	252.48	253.44	254.40	255.36	256.32	257.28	258.24	259.20	260.16	261.12	262.08	263.04	264.00	264.95	265.90	266.85	267.80	268.75	269.70	270.65
1 3/16	266.48	267.49	268.50	269.51	270.52	271.53	272.54	273.55	274.56	275.57	276.58	277.59	278.60	279.61	280.62	281.63	282.64	283.65	284.66	285.67
1¼	280.56	281.62	282.68	283.74	284.80	285.86	286.92	287.98	289.04	290.10	291.16	292.22	293.28	294.34	295.40	296.46	297.52	298.58	299.64	300.70
1 5/16	294.48	295.60	296.72	297.84	298.96	300.08	301.20	302.32	303.44	304.56	305.68	306.80	307.92	309.04	310.16	311.28	312.40	313.52	314.64	315.76
1⅜	308.56	309.73	310.90	312.07	313.24	314.41	315.58	316.75	317.92	319.08	320.24	321.40	322.56	323.73	324.90	326.07	327.24	328.41	329.58	330.75
1 7/16	322.56	323.78	325.00	326.22	327.44	328.66	329.88	331.10	332.32	333.55	334.78	336.01	337.24	338.47	339.70	340.93	342.16	343.39	344.62	345.85
1½	336.64	337.91	339.18	340.45	341.72	342.99	344.26	345.53	346.80	348.07	349.36	350.63	351.90	353.18	354.46	355.74	357.02	358.29	359.56	360.84

WEIGHTS OF FLAT ROLLED STEEL PER LINEAL FOOT

WIDTH IN INCHES

Thickness	71	71¼	71½	71¾	72	72¼	72½	72¾	73	73¼	73½	73¾	74	74¼	74½	74¾	75	75¼	75½	75¾
3/16	45.26	45.44	45.60	45.76	45.92	46.08	46.24	46.40	46.56	46.72	46.88	47.04	47.20	47.36	47.52	47.66	47.80	47.94	48.08	48.23
¼	60.32	60.53	60.74	60.96	61.18	61.40	61.62	61.83	62.04	62.26	62.48	62.70	62.92	63.14	63.36	63.58	63.80	64.01	64.22	64.44
5/16	75.44	75.70	75.96	76.22	76.48	76.74	77.00	77.26	77.52	77.79	78.06	78.34	78.62	78.88	79.14	79.41	79.68	79.95	80.22	80.48
⅜	90.56	90.88	91.20	91.52	91.84	92.16	92.48	92.80	93.12	93.44	93.76	94.08	94.40	94.72	95.04	95.36	95.68	96.00	96.32	96.64
7/16	105.66	106.03	106.40	106.78	107.16	107.54	107.91	108.28	108.64	109.00	109.36	109.72	110.08	110.46	110.84	111.22	111.60	111.98	112.36	112.73
½	120.68	121.10	121.52	121.96	122.40	122.83	123.26	123.69	124.12	124.55	124.98	125.41	125.84	126.26	126.68	127.10	127.52	127.94	128.38	128.80
9/16	135.84	136.32	136.80	137.28	137.76	138.24	138.72	139.18	139.64	140.11	140.58	141.05	141.52	142.00	142.48	142.96	143.44	143.92	144.40	144.88
⅝	150.86	151.39	151.92	152.46	153.00	153.53	154.06	154.59	155.12	155.65	156.18	156.71	157.24	157.77	158.30	158.83	159.36	159.89	160.42	160.95
11/16	165.94	166.52	167.10	168.70	168.30	168.89	169.48	170.06	170.64	171.22	171.80	172.38	172.96	173.55	174.14	174.73	175.32	175.91	176.50	177.08
¾	181.12	181.76	182.40	183.04	183.68	184.31	184.94	185.57	186.20	186.83	187.46	188.09	188.72	189.36	190.00	190.64	191.28	191.92	192.56	193.20
13/16	196.12	196.81	197.50	198.19	198.88	199.57	200.26	200.95	201.64	202.33	203.02	203.71	204.40	205.09	205.78	206.47	207.16	207.85	208.54	209.23
⅞	211.29	212.04	212.78	213.51	214.24	214.98	215.72	216.46	217.20	217.94	218.68	219.42	220.16	220.90	221.64	222.38	223.12	223.86	224.60	225.35
15/16	226.34	227.14	227.94	228.73	229.52	230.32	231.12	231.92	232.72	233.52	234.32	235.12	235.92	236.72	237.52	238.32	239.12	239.91	240.70	241.50
1	241.40	242.25	243.10	243.95	244.80	245.65	246.50	247.35	248.20	249.05	249.90	250.75	251.60	252.45	253.30	254.15	255.00	255.85	256.70	257.55
1 1/16	256.48	257.38	258.28	259.18	260.08	260.98	261.88	262.78	263.68	264.58	265.48	266.38	267.28	268.18	269.09	270.00	270.91	271.82	272.73	273.63
1⅛	271.60	272.55	273.50	274.45	275.40	276.35	277.30	278.25	279.20	280.15	281.11	282.07	283.04	284.00	284.96	285.92	286.88	287.84	288.80	289.76
1 3/16	286.68	287.69	288.70	289.71	290.72	291.73	292.74	293.75	294.76	295.77	296.78	297.79	298.80	299.81	300.82	301.83	302.84	303.85	304.86	305.87
1¼	301.76	302.82	303.88	304.94	3.6.00	307.06	308.12	309.18	310.24	311.30	312.36	313.42	314.48	315.54	316.60	317.66	318.72	319.78	320.84	321.90
1 5/16	316.88	318.00	319.12	320.22	321.32	322.44	323.56	324.68	325.80	326.91	328.02	329.13	330.24	331.36	332.48	333.60	334.72	335.84	336.96	338.08
1⅜	331.92	333.09	334.26	335.43	336.60	337.77	338.94	340.11	341.28	342.45	343.62	344.79	345.96	347.13	348.30	349.47	350.64	351.81	352.98	354.15
1 7/16	347.08	348.31	349.54	350.77	352.00	353.21	354.42	355.63	356.84	358.05	359.26	360.48	361.70	362.92	364.14	365.37	366.60	367.82	369.04	370.28
1½	362.12	363.39	364.66	365.93	367.20	368.48	369.76	371.04	372.32	373.60	374.88	376.16	377.44	378.72	380.00	381.25	382.50	383.77	385.04	386.32

WEIGHTS OF FLAT ROLLED STEEL PER LINEAL FOOT

WIDTH IN INCHES

Thickness	76	76¼	76½	76¾	77	77¼	77½	77¾	78	78¼	78½	78¾	79	79¼	79½	79¾	80	80¼	80½	80¾
7/16	48.40	48.56	48.72	48.88	49.04	49.21	49.38	49.55	49.72	49.89	50.06	50.23	50.40	50.06	50.72	50.88	51.04	51.20	51.36	51.52
¼	64.64	64.85	65.06	65.27	65.48	65.69	65.90	66.11	66.32	66.53	66.74	66.95	67.16	67.37	67.58	67.79	68.00	68.21	68.42	68.63
9/16	80.78	81.04	81.30	81.57	81.84	82.10	82.36	82.62	82.88	83.14	83.40	83.66	83.92	84.18	84.44	84.70	84.96	85.22	85.48	85.74
3/8	96.90	97.28	97.60	97.92	98.24	98.55	98.86	99.11	99.48	99.80	100.12	100.44	100.76	101.07	101.38	101.69	102.00	102.32	102.64	102.96
7/16	113.12	113.49	113.86	114.23	114.60	114.96	115.32	115.68	116.04	116.41	116.78	117.15	117.52	117.89	118.26	118.63	119.00	119.37	119.74	120.11
½	129.24	129.66	130.08	130.50	130.92	131.34	131.76	132.18	132.60	133.02	133.44	133.86	134.28	134.70	135.13	135.56	136.00	136.42	136.84	137.26
9/16	145.36	145.84	146.32	146.80	147.28	147.76	148.24	148.72	149.20	149.68	150.16	150.64	151.12	151.61	152.10	152.59	153.08	153.57	154.06	154.54
5/8	161.48	162.01	162.54	163.07	163.60	164.13	164.66	165.19	165.72	166.25	166.78	167.31	167.84	168.38	168.92	169.46	170.00	170.53	171.06	171.59
11/16	177.68	178.26	178.84	179.42	180.00	180.58	181.16	181.74	182.32	182.91	183.50	184.09	184.68	185.25	185.82	186.39	186.96	187.44	188.12	188.70
¾	193.84	194.48	195.12	195.76	196.40	197.03	197.66	198.29	198.92	199.55	200.18	200.81	201.44	202.08	202.72	203.36	204.00	204.64	205.28	205.92
13/16	209.92	210.62	211.32	212.02	212.72	213.41	214.10	214.79	215.48	216.17	216.86	217.55	218.24	218.93	219.62	220.31	221.00	221.69	222.38	223.07
⅞	226.08	226.83	227.56	228.30	229.04	229.79	230.54	231.29	232.04	232.79	233.54	234.29	235.04	235.79	236.52	237.26	238.00	238.75	239.50	240.25
15/16	242.28	243.07	243.86	244.65	245.44	246.24	247.04	247.84	248.64	249.44	250.24	251.04	251.84	252.64	253.44	254.24	255.04	255.84	256.64	257.44
1	258.40	259.25	260.10	260.95	261.80	262.65	263.50	264.35	265.20	266.05	266.90	267.75	268.60	269.45	270.30	271.15	272.00	272.85	273.70	274.55
1 1/16	274.56	275.47	276.38	277.29	278.20	279.10	280.00	280.90	281.80	282.70	283.60	284.50	285.40	286.30	287.20	288.10	289.00	289.90	290.80	291.70
1⅛	290.72	291.67	292.62	293.57	294.52	295.47	296.42	297.37	298.32	299.29	300.24	301.20	302.16	303.12	304.08	305.04	306.00	306.96	307.92	308.87
1 3/16	306.88	307.88	308.88	309.88	310.88	311.90	312.92	313.92	314.92	315.93	316.94	317.95	318.96	319.97	320.98	321.99	323.00	324.01	325.02	326.03
1¼	322.96	324.02	325.08	326.16	327.24	328.31	329.38	330.45	331.52	332.58	333.64	334.70	335.76	336.82	337.88	338.94	340.00	341.06	342.12	343.18
1 5/16	339.20	340.32	341.44	342.56	343.68	344.80	345.92	347.04	348.16	349.28	350.40	351.52	352.64	353.76	354.88	356.00	357.12	358.23	359.34	360.46
1⅜	355.32	356.49	357.66	358.83	360.00	361.17	362.34	363.51	364.68	365.84	367.00	368.16	369.32	370.49	371.66	372.83	374.00	375.17	376.34	377.51
1 7/16	371.50	372.72	373.94	375.17	376.40	377.62	378.84	380.05	381.26	382.48	383.69	384.89	386.10	387.32	388.54	389.77	391.00	392.22	393.44	394.66
1½	387.60	388.88	390.16	391.44	392.72	394.00	395.28	396.56	397.84	399.10	400.36	401.63	402.89	404.16	405.44	406.72	408.00	409.28	410.56	411.84

WEIGHTS OF FLAT ROLLED STEEL PER LINEAL FOOT

Thickness	WIDTH IN INCHES																				
	81	81¼	81½	81¾	82	82¼	82½	82¾	83	83¼	83½	83¾	84	84¼	84½	84¾	85	85¼	85½	85¾
3/16	51.68	51.84	52.00	52.16	52.32	52.48	52.64	52.80	52.96	53.12	53.28	53.44	53.60	53.76	53.92	54.08	54.24	54.40	54.56	54.72
¼	68.84	69.05	69.26	69.47	69.68	69.89	70.10	70.31	70.52	70.73	70.94	71.15	71.36	71.58	71.80	72.02	72.24	72.46	72.68	72.90
5/16	86.02	86.29	86.56	86.83	87.10	87.37	87.64	87.91	88.18	88.45	88.72	89.00	89.28	89.54	89.80	90.08	90.35	90.60	90.85	91.11
⅜	103.28	103.60	103.92	104.24	104.56	104.88	105.20	105.52	105.84	106.16	106.48	106.80	107.12	107.44	107.76	108.08	108.40	108.72	109.04	109.36
7/16	120.48	120.86	121.24	121.62	122.00	122.37	122.74	123.11	123.48	123.85	124.22	124.59	124.96	125.33	125.70	126.07	126.44	126.81	127.18	127.55
½	137.68	138.10	138.52	138.94	139.36	139.78	140.20	140.62	141.04	141.48	141.92	142.36	142.80	143.23	143.66	144.09	144.52	144.95	145.38	145.81
9/16	155.04	155.52	156.00	156.46	156.92	157.38	157.84	158.30	158.76	159.23	159.70	160.17	160.64	161.12	161.60	162.08	162.56	163.04	163.52	164.00
⅝	172.12	172.65	173.18	173.71	174.24	174.78	175.32	175.86	176.40	176.94	177.48	178.02	178.56	179.09	179.62	180.15	180.68	181.21	181.74	182.27
11/16	189.28	189.87	190.46	191.06	191.66	192.24	192.82	193.41	194.00	194.58	195.16	195.74	196.32	196.91	197.50	198.09	198.68	199.27	199.86	200.44
¾	206.56	207.20	207.84	208.48	209.12	209.76	210.40	211.04	211.68	212.32	212.96	213.60	214.24	214.88	215.52	216.16	216.80	217.44	218.08	218.72
13/16	223.76	224.46	225.16	225.86	226.56	227.25	227.94	228.63	229.32	230.00	230.68	231.36	232.04	232.72	233.40	234.08	234.76	235.45	236.14	236.83
⅞	241.00	241.75	242.50	243.25	244.00	244.75	245.50	246.25	247.00	247.74	248.48	249.22	249.96	250.71	251.46	252.20	252.94	253.68	254.42	255.17
15/16	258.24	259.04	259.84	260.64	261.44	262.24	263.04	263.84	264.64	265.44	266.24	267.04	267.84	268.64	269.44	270.24	271.04	271.84	272.64	273.44
1	275.40	276.25	277.10	277.95	278.80	279.65	280.50	281.35	282.20	283.05	283.90	284.75	285.60	286.45	287.30	288.15	289.00	289.85	290.70	291.55
1 1/16	292.60	293.50	294.40	295.30	296.20	297.10	298.00	298.90	299.80	300.70	301.60	302.50	303.40	304.30	305.20	306.10	307.00	307.91	308.82	309.71
1⅛	309.84	310.80	311.76	312.72	313.68	314.65	315.58	316.53	317.48	318.44	319.40	320.36	321.32	322.27	323.22	324.17	325.12	326.08	327.04	328.00
1 3/16	327.04	328.05	329.06	330.06	331.06	332.07	333.08	334.08	335.08	336.10	337.12	338.14	339.16	340.17	341.18	342.19	343.20	344.20	345.20	346.20
1¼	344.24	345.30	346.36	347.42	348.48	349.54	350.60	351.66	352.72	353.80	354.88	355.96	357.04	358.10	359.16	360.22	361.28	362.34	363.40	364.46
1 5/16	361.56	362.68	363.80	364.90	366.00	367.11	368.22	369.33	370.44	371.55	372.66	373.77	374.88	375.99	377.10	378.21	379.32	380.43	381.54	382.65
1⅜	378.68	379.85	381.02	382.19	383.36	384.53	385.70	386.87	388.04	389.20	390.36	391.52	392.68	393.85	395.02	396.19	397.36	398.52	399.68	400.84
1 7/16	395.88	397.10	398.32	399.53	400.74	401.96	403.18	404.40	405.62	406.86	408.10	409.34	410.58	411.81	413.04	414.27	415.50	416.71	417.92	419.14
1½	413.12	414.40	415.68	416.96	418.24	419.51	420.78	422.05	423.32	424.59	425.86	427.13	428.40	429.68	430.96	432.24	433.52	434.80	436.08	437.36

WEIGHTS OF FLAT ROLLED STEEL PER LINEAL FOOT

WIDTH IN INCHES

Thickness	86	86¼	86½	86¾	87	87¼	87½	87¾	88	88¼	88½	88¾	89	89¼	89½	89¾	90	90¼	90½	90¾
3/16	54.88	55.04	55.20	55.36	55.52	55.68	55.84	56.00	56.16	56.31	56.46	56.61	56.76	56.91	57.06	57.21	57.36	57.51	57.66	57.81
¼	73.12	73.32	73.52	73.72	73.92	74.13	74.34	74.55	74.76	74.98	75.20	75.42	75.64	75.86	76.08	76.30	76.52	76.73	76.94	77.15
5/16	91.36	91.64	91.88	92.14	92.40	92.66	92.92	93.18	93.44	93.71	93.98	94.25	94.52	94.79	95.06	95.33	95.60	95.87	96.14	96.42
⅜	109.68	110.00	110.32	110.64	110.96	111.28	111.60	111.92	112.24	112.56	112.88	113.20	113.52	113.84	114.16	114.48	114.80	115.13	115.46	115.79
7/16	127.92	128.29	128.66	129.03	129.40	129.77	130.14	130.51	130.88	131.26	131.64	132.02	132.40	132.78	133.16	133.54	133.92	134.30	134.68	135.06
½	146.24	146.66	147.08	147.50	147.92	148.34	148.76	149.18	149.60	150.03	150.46	150.89	151.32	151.75	152.18	152.61	153.04	153.46	153.88	154.30
9/16	164.48	164.94	165.40	165.86	166.32	166.78	167.24	167.71	168.18	168.66	169.14	169.62	170.10	170.59	171.08	171.57	172.06	172.55	173.04	173.53
⅝	182.80	183.33	183.86	184.39	184.92	185.45	185.98	186.51	187.04	187.57	188.10	188.63	189.16	189.69	190.22	190.75	191.28	191.81	192.34	192.87
11/16	201.04	201.61	202.18	202.75	203.32	203.89	204.46	205.04	205.62	206.21	206.80	207.40	208.00	208.60	209.20	209.79	210.38	210.97	211.56	212.15
¾	219.36	219.99	220.62	221.25	221.88	222.51	223.14	223.77	224.40	225.03	225.66	226.29	226.92	227.55	228.18	228.82	229.46	230.10	230.74	231.38
13/16	237.52	238.22	238.92	239.62	240.32	241.02	241.72	242.42	243.12	243.82	244.52	245.22	245.92	246.61	247.30	247.98	248.66	249.35	250.04	250.73
⅞	255.88	256.61	257.34	258.08	258.82	259.56	260.30	261.04	261.78	262.52	263.26	264.01	264.76	265.51	266.26	267.01	267.76	268.50	269.24	270.00
15/16	274.22	275.01	275.80	276.59	277.38	278.17	278.96	279.75	280.54	281.33	282.12	282.92	283.72	284.51	285.30	286.09	286.88	287.68	288.48	289.28
1	292.40	293.26	294.10	294.95	295.80	296.65	297.50	298.35	299.20	300.05	300.90	301.75	302.60	303.45	304.30	305.15	306.00	306.85	307.70	308.55
1 1/16	310.65	311.55	312.46	313.37	314.28	315.12	316.10	317.01	317.92	318.82	319.72	320.62	321.52	322.42	323.32	324.22	325.12	326.02	326.92	327.82
1⅛	328.96	329.92	330.88	331.84	332.80	333.76	334.72	335.68	336.64	337.60	338.56	339.52	340.48	341.44	342.40	343.36	344.32	345.27	346.22	347.18
1 3/16	347.20	348.21	349.22	350.23	351.24	352.26	353.28	354.30	355.32	356.33	357.34	358.35	359.36	360.36	361.36	362.36	363.36	364.38	365.40	366.42
1¼	365.52	366.58	367.64	368.70	369.76	370.84	371.92	373.00	374.08	375.14	376.20	377.26	378.32	379.38	380.44	381.50	382.56	383.62	384.68	385.74
1 5/16	383.76	384.87	385.98	387.09	388.20	389.31	390.42	391.53	392.64	393.76	394.88	396.00	397.12	398.24	399.36	400.48	401.60	402.72	403.84	404.96
1⅜	402.00	403.17	404.34	405.51	406.68	407.85	409.02	410.19	411.36	412.53	413.70	414.87	416.04	417.21	418.38	419.54	420.72	421.89	423.06	424.23
1 7/16	420.34	421.55	422.76	423.98	425.20	426.42	427.64	428.86	430.08	431.31	432.54	433.77	435.00	436.23	437.46	438.69	439.92	441.14	442.36	443.58
1½	438.64	439.91	441.18	442.45	443.72	444.99	446.26	447.53	448.80	450.07	451.34	452.61	453.88	455.15	456.42	457.69	458.96	460.24	461.52	462.80

WEIGHTS OF FLAT ROLLED STEEL PER LINEAL FOOT

Thickness	WIDTH IN INCHES																			
	91	91¼	91½	91¾	92	92¼	92½	92¾	93	93¼	93½	93¾	94	94¼	94½	94¾	95	95¼	95½	95¾
3/16	57.96	58.12	58.28	58.49	58.58	58.74	58.90	59.07	59.24	59.41	59.58	59.75	59.92	60.09	60.26	60.43	60.60	60.77	60.94	61.11
¼	77.36	77.57	77.78	78.00	78.22	78.44	78.66	78.88	79.10	79.32	79.54	79.76	79.98	80.19	80.40	80.60	80.80	81.00	81.20	81.41
5/16	96.70	96.97	97.24	97.50	97.76	98.03	98.30	98.57	98.84	91.11	99.38	99.65	99.92	100.19	100.46	100.73	101.00	101.27	101.54	101.81
⅜	116.12	116.44	116.76	117.09	117.42	117.73	118.04	118.36	118.68	118.99	119.30	119.61	119.92	120.23	120.54	120.85	121.16	121.47	121.78	122.10
7/16	135.44	135.82	136.20	136.57	136.94	137.32	137.70	138.08	138.46	138.82	139.18	139.55	139.92	140.29	140.66	141.03	141.40	141.77	142.14	142.51
½	154.72	155.14	155.56	155.98	156.40	156.82	157.24	157.66	158.08	158.50	158.92	159.34	159.76	160.19	160.62	161.05	161.48	161.91	162.34	162.76
9/16	174.01	174.51	175.00	175.50	176.00	176.48	176.96	177.44	177.92	178.40	178.88	179.36	179.84	180.32	180.80	181.28	181.76	182.24	182.72	183.20
⅝	193.40	193.93	194.46	194.99	195.52	196.05	196.58	197.11	197.64	198.17	198.70	199.23	199.76	200.29	200.82	201.35	201.88	202.41	202.94	203.47
11/16	212.74	213.33	213.91	214.49	215.06	215.64	216.22	216.81	217.40	217.99	218.58	219.17	219.76	220.35	220.94	221.53	222.12	222.71	223.30	223.89
¾	232.02	232.66	233.31	233.96	234.61	235.26	235.90	236.55	237.20	237.84	238.48	239.12	239.76	240.39	241.02	241.65	242.28	242.91	243.54	244.18
13/16	251.42	252.10	252.78	253.45	254.12	254.81	255.50	256.19	256.88	257.57	258.26	258.95	259.64	260.33	261.02	261.71	262.40	263.09	263.78	264.47
⅞	270.72	271.46	272.21	272.96	273.72	274.46	275.20	275.94	276.68	277.42	278.16	278.90	279.64	280.38	281.12	281.86	282.60	283.35	284.10	284.85
15/16	290.08	290.88	291.68	292.48	293.28	294.08	294.88	295.68	296.48	297.28	298.08	298.88	299.68	300.48	301.26	302.05	302.84	303.63	304.42	305.22
1	309.40	310.25	311.10	311.95	312.80	313.65	314.50	315.35	316.20	317.05	317.90	318.75	319.60	320.45	321.30	322.15	323.00	323.85	324.70	325.55
1 1/16	328.72	329.62	330.52	331.42	332.32	333.23	334.14	335.05	335.96	336.85	337.78	338.69	339.60	340.50	341.40	342.30	343.20	344.10	345.00	345.90
1⅛	348.12	349.08	350.04	351.01	351.97	352.93	353.88	354.84	355.80	356.74	357.68	358.62	359.56	360.52	361.48	362.44	363.40	364.35	365.30	366.25
1 3/16	367.44	368.46	369.48	370.50	371.52	372.53	373.54	374.55	375.56	376.57	377.58	378.59	379.60	380.61	381.62	382.63	383.64	384.65	385.66	386.67
1¼	386.80	387.86	388.92	389.98	391.04	392.10	393.16	394.22	395.28	396.34	397.40	398.46	399.52	400.58	401.64	402.70	403.76	404.82	405.88	406.94
1 5/16	406.08	407.20	408.32	409.44	410.56	411.68	412.80	413.92	415.04	416.16	417.28	418.40	419.52	420.64	421.76	422.88	424.00	425.12	426.24	427.36
1⅜	425.40	426.57	427.74	428.91	430.08	431.25	432.42	433.59	434.76	435.93	437.10	438.27	439.44	440.61	441.78	443.05	444.12	445.39	446.46	447.63
1 7/16	444.80	446.02	447.24	448.46	449.68	450.90	452.12	453.34	454.56	455.78	457.00	458.22	459.44	460.66	461.88	463.10	464.32	465.54	466.76	467.98
1½	464.08	465.36	466.64	467.92	469.20	470.48	471.76	473.04	474.32	475.60	476.88	478.16	479.44	480.72	482.00	483.28	484.56	485.83	487.10	488.38

WEIGHTS OF FLAT ROLLED STEEL PER LINEAL FOOT

WIDTH IN INCHES

Thickness	96	96¼	96½	96¾	97	97¼	97½	97¾	98	98¼	98½	98¾	99	99¼	99½	99¾	100	100¼	100½	100¾
3/16	61.28	61.44	61.60	61.76	61.92	62.08	62.24	62.40	62.56	62.72	62.88	63.04	63.20	63.36	63.52	63.68	63.84	63.99	64.14	64.30
¼	81.60	81.82	82.04	82.26	82.48	82.70	82.92	83.14	83.36	83.57	83.78	83.99	84.20	84.41	84.62	84.83	85.04	85.25	85.46	85.67
5/16	102.08	102.34	102.60	102.86	103.12	103.37	103.62	103.87	104.12	104.38	104.64	104.90	105.16	105.43	105.70	105.97	106.24	106.51	106.78	107.05
⅜	122.40	122.72	123.04	123.36	123.68	124.00	124.32	124.64	124.96	125.28	125.60	125.92	126.24	126.56	126.88	127.20	127.52	127.84	128.16	128.48
7/16	142.88	143.25	143.62	143.99	144.36	144.73	145.10	145.47	145.84	146.21	146.58	146.95	147.32	147.69	148.06	148.43	148.80	149.17	149.54	149.91
½	163.20	163.62	164.04	164.46	164.88	165.30	165.72	166.14	166.56	166.99	167.42	167.85	168.28	168.71	169.14	169.57	170.00	170.42	170.84	171.26
9/16	183.68	184.15	184.62	185.09	185.56	186.03	186.50	186.97	187.44	187.91	188.38	188.85	189.32	189.79	190.26	190.73	191.21	191.69	192.17	192.66
⅝	204.00	204.53	205.06	205.59	206.12	206.65	207.18	207.71	208.24	208.77	209.30	209.83	210.36	210.89	211.42	211.95	212.48	213.01	213.54	214.07
11/16	224.48	225.06	225.64	226.22	226.80	227.38	227.96	228.54	229.12	229.70	230.28	230.86	231.44	232.02	232.60	233.18	233.76	234.34	234.92	235.50
¾	244.80	245.45	246.10	246.75	247.40	248.05	248.70	249.35	250.00	250.64	251.27	251.90	252.53	253.16	253.79	254.42	255.05	255.68	256.32	256.96
13/16	265.16	265.85	266.54	267.23	267.92	268.60	269.28	269.96	270.65	271.34	272.04	272.74	273.44	274.14	274.84	275.54	276.24	276.93	277.62	278.31
⅞	285.60	286.34	287.08	287.82	288.56	289.30	290.04	290.78	291.52	292.27	293.02	293.77	294.52	295.27	296.02	296.77	297.52	298.26	299.00	299.74
15/16	306.00	306.80	307.60	308.40	309.20	310.00	310.80	311.60	312.40	313.19	313.98	314.77	315.56	316.35	317.14	317.93	318.72	319.51	320.32	321.12
1	326.40	327.25	328.10	328.95	329.80	330.65	331.50	332.35	333.20	334.05	334.90	335.75	336.60	337.45	338.30	339.15	340.00	340.85	341.70	342.55
1 1/16	346.80	347.70	348.60	349.50	350.40	351.30	352.20	353.10	354.00	354.91	355.82	356.73	357.64	358.55	359.46	360.37	361.28	362.18	363.08	363.98
1⅛	367.20	368.16	369.12	370.08	371.04	372.00	372.96	373.92	374.88	375.84	376.80	377.76	378.72	379.68	380.64	381.60	382.56	383.51	384.46	385.41
1 3/16	387.68	388.68	389.68	390.68	391.68	392.68	393.68	394.68	395.68	396.68	397.68	398.68	399.68	400.68	401.68	402.68	403.68	404.69	405.70	406.72
1¼	408.00	409.06	410.12	411.18	412.24	413.30	414.36	415.42	416.48	417.54	418.60	419.66	420.72	421.78	422.84	423.90	424.96	426.03	427.10	428.17
1 5/16	428.48	429.59	430.70	431.81	432.92	434.03	435.14	436.25	437.36	438.47	439.58	440.69	441.80	442.90	444.01	445.12	446.24	447.36	448.48	449.59
1⅜	448.80	449.97	451.14	452.31	453.48	454.65	455.82	456.99	458.16	459.33	460.50	461.67	462.84	464.01	465.18	466.35	467.51	468.68	469.85	471.00
1 7/16	469.20	470.42	471.64	472.86	474.08	475.30	476.52	477.74	478.96	480.19	481.42	482.65	483.88	485.11	486.34	487.57	488.80	490.02	491.24	492.46
1½	489.60	490.88	492.16	493.44	494.72	496.00	497.28	498.56	499.84	501.11	502.38	503.64	504.92	506.19	507.46	508.73	510.00	511.27	512.54	513.82

WEIGHTS OF FLAT ROLLED STEEL PER LINEAL FOOT

WIDTH IN INCHES

Thickness	101	101¼	101½	101¾	102	102¼	102½	102¾	103	103¼	103½	103¾	104	104¼	104½	104¾	105	105¼	105½	105¾
3/16	64.45	64.60	64.75	64.90	65.05	65.20	65.36	65.52	65.68	65.83	65.97	66.12	66.25	66.39	66.54	66.69	66.85	67.01	67.17	67.34
¼	85.88	86.09	86.30	86.51	86.72	86.94	87.16	87.38	87.60	87.82	88.04	88.26	88.48	88.69	88.90	89.11	89.32	89.53	89.74	89.95
5/16	107.32	107.59	107.86	108.13	108.40	108.66	108.92	109.18	109.44	109.70	109.96	110.22	110.48	110.74	111.02	111.28	111.56	111.83	112.10	112.37
3/8	128.80	129.12	129.44	129.76	130.08	130.40	130.72	131.04	131.36	131.68	132.00	132.32	132.64	132.96	133.28	133.60	133.92	134.24	134.56	134.88
7/16	150.28	150.65	151.02	151.39	151.76	152.13	152.50	152.87	153.24	153.61	153.98	154.36	154.74	155.12	155.50	155.87	156.24	156.62	157.00	157.38
½	171.68	172.10	172.52	172.94	173.36	173.79	174.22	174.65	175.08	175.51	175.94	176.37	176.80	177.23	177.66	178.09	178.52	178.95	179.38	179.81
9/16	193.15	193.63	194.12	194.62	195.12	195.61	196.10	196.59	197.07	197.54	198.00	198.46	198.92	199.39	199.86	200.33	200.80	201.28	201.76	202.24
5/8	214.60	215.13	215.66	216.19	216.72	217.25	217.78	218.31	218.84	219.37	219.90	220.43	220.96	221.50	222.04	222.58	223.12	223.65	224.18	224.71
11/16	236.08	236.66	237.24	237.82	238.42	238.98	239.56	240.14	240.72	241.32	241.92	242.52	243.12	243.70	244.28	244.86	245.44	246.02	246.60	247.18
¾	257.60	258.24	258.88	259.52	260.16	260.80	261.44	262.08	262.72	263.36	264.00	264.64	265.28	265.92	266.56	267.20	267.84	268.48	269.12	269.76
13/16	279.00	279.69	280.38	281.07	281.76	282.46	283.16	283.86	284.56	285.24	285.92	286.60	287.28	287.97	288.66	289.35	290.04	290.73	291.42	292.11
7/8	300.48	301.23	301.98	302.73	303.48	304.23	304.98	305.73	306.48	307.22	307.96	308.71	309.44	310.18	310.92	311.66	312.40	313.15	313.90	314.65
15/16	321.92	322.72	323.52	324.32	325.12	325.92	326.72	327.52	328.32	329.12	329.92	330.72	331.52	332.32	333.12	333.92	334.72	335.52	336.32	337.12
1	343.40	344.25	345.10	345.95	346.80	347.65	348.50	349.35	350.20	351.05	351.90	352.75	353.60	354.45	355.30	356.15	357.00	357.85	358.70	359.55
1 1/16	364.88	365.78	366.68	367.58	368.48	369.38	370.28	371.18	372.08	372.98	373.88	374.78	375.68	376.59	377.50	378.41	379.32	380.23	381.14	382.05
1⅛	386.36	387.31	388.26	389.21	390.16	391.11	392.06	393.01	393.96	394.91	395.86	396.81	397.76	398.71	399.66	400.61	401.56	402.51	403.46	404.41
1 3/16	407.74	408.76	409.78	410.80	411.82	412.84	413.86	414.88	415.90	416.88	417.86	418.85	419.84	420.86	421.88	422.90	423.92	424.94	425.96	426.98
1¼	429.24	430.31	431.38	432.45	433.52	434.59	435.66	436.73	437.80	438.85	439.90	440.95	442.00	443.07	444.14	445.21	446.28	447.35	448.42	449.49
1 5/16	450.72	451.84	452.96	454.08	455.20	456.31	457.42	458.53	459.65	460.77	461.90	462.03	464.16	465.28	466.40	467.52	468.64	469.76	470.88	472.00
1⅜	472.16	473.33	474.50	475.66	476.82	477.99	479.16	480.32	481.48	482.65	483.82	484.99	486.16	487.33	488.50	489.67	490.84	492.01	493.18	494.35
1 7/16	493.68	495.90	496.12	497.34	498.56	499.78	501.00	502.22	503.44	504.66	505.88	507.10	508.32	509.54	510.76	511.98	513.20	514.42	515.64	516.86
1½	515.08	516.35	517.62	518.91	520.20	521.48	522.76	523.04	525.32	526.59	527.86	529.13	530.40	531.68	532.96	534.24	535.52	536.80	538.08	539.36

WEIGHTS OF FLAT ROLLED STEEL PER LINEAL FOOT

WIDTH IN INCHES

Thickness	106	106¼	106½	106¾	107	107¼	107½	107¾	108	108¼	108½	108¾	109	109¼	109½	109¾	110	110¼	110½	110¾
3/16	67.51	67.68	67.84	68.00	68.16	68.32	68.48	68.64	68.80	68.96	69.12	69.28	69.44	69.60	69.76	69.92	70.08	70.24	70.40	70.56
¼	90.16	90.37	90.58	90.79	91.00	91.21	91.42	91.63	91.84	92.05	92.26	92.47	92.68	92.89	93.10	93.31	93.52	93.73	93.94	94.15
5/16	112.64	112.90	113.16	113.42	113.68	113.94	114.20	114.46	114.72	115.00	115.26	115.53	115.80	116.07	116.34	116.61	116.88	117.15	117.42	117.69
⅜	135.20	135.52	135.84	136.16	136.48	136.80	137.12	137.44	137.76	138.07	138.38	138.70	139.02	139.34	139.66	139.98	140.30	140.62	140.94	141.26
7/16	157.76	158.13	158.48	158.84	159.20	159.57	159.94	160.31	160.68	161.05	161.42	161.79	162.16	162.53	162.90	163.27	163.64	164.01	164.38	164.75
½	180.24	180.67	181.10	181.53	181.96	182.39	182.82	183.25	183.68	184.10	184.52	184.94	185.36	185.78	186.20	186.62	187.04	187.46	187.88	188.30
9/16	202.72	203.20	203.68	204.16	204.64	205.12	205.60	206.08	206.56	207.04	207.52	208.00	208.48	208.96	209.44	209.92	210.40	210.88	211.36	211.84
⅝	225.24	225.77	226.30	226.83	227.36	227.89	228.42	228.95	229.48	230.01	230.54	231.07	231.60	232.13	232.66	233.19	233.72	234.25	234.78	235.31
11/16	247.76	248.34	248.92	249.50	250.08	250.66	251.26	251.85	252.44	253.02	253.60	254.18	254.76	255.34	255.94	256.53	257.12	257.70	258.28	258.86
¾	270.40	271.04	271.68	272.32	272.96	273.60	274.24	274.88	275.52	276.16	276.80	277.44	278.08	278.71	279.34	279.97	280.60	281.24	281.88	282.52
13/16	292.80	293.49	294.18	294.87	295.56	296.25	296.94	297.63	298.32	299.01	299.70	300.39	301.08	301.77	302.46	303.15	303.84	304.53	305.22	305.91
⅞	315.40	316.14	316.88	317.62	318.36	319.10	319.84	320.58	321.32	322.07	322.82	323.57	324.32	325.05	325.78	326.52	327.26	327.99	328.72	329.44
15/16	337.92	338.72	339.52	340.32	341.12	342.92	342.72	343.51	344.30	345.10	345.90	346.69	347.48	348.27	349.06	349.85	350.64	351.44	352.24	353.04
1	360.40	361.25	362.10	362.95	363.80	364.65	365.50	366.35	367.20	368.05	368.90	369.75	370.60	371.45	372.30	373.15	374.00	374.85	375.70	376.55
1 1/16	382.96	383.86	384.76	385.66	386.56	387.46	388.36	389.26	390.16	391.06	391.96	392.86	393.76	394.66	395.56	396.46	397.36	398.26	399.16	400.06
1⅛	405.36	406.32	407.28	408.24	409.20	410.16	411.12	412.08	413.04	414.00	414.96	415.92	416.88	417.84	418 80	419.76	420.72	421.68	422.64	423.60
1 3/16	428.00	429.01	430.02	431.03	432.04	433.04	434.04	435.04	436.04	437.05	438.06	439.07	440.08	441.09	442.10	443.11	444.12	445.13	446.14	447.15
1¼	450.56	451.62	452.68	453.74	454.80	455.86	456.92	457.98	459.04	460.10	461.16	462.22	463.28	464.34	465.40	466.46	467.52	468.58	469.64	470.70
1 5/16	473.12	474.23	475.34	476.45	477.56	478.67	479.78	480.89	482.00	483.11	484.22	485.33	486.44	487.55	488.66	489.77	490.88	491.99	493.10	494.21
1⅜	495.52	496.69	497.86	499.03	500.20	501.37	502.54	503.71	504.88	506.05	507.22	508.39	509.56	510.73	511.90	513.07	514.24	515.41	516.58	517.75
1 7/16	518.08	519.30	520.52	521.74	522.96	524.18	525.40	526.62	527.84	529.06	530.28	531.50	532.72	533.94	535.16	536.38	537.60	538.82	540.04	541.26
1½	540.64	541.92	543.20	544.48	545.76	547.04	548.32	549.60	550.88	552.14	553.42	554.69	555.96	557.23	558.50	559.77	561.04	562.31	563.58	564.85

WEIGHTS OF FLAT ROLLED STEEL PER LINEAL FOOT

WIDTH IN INCHES

Thickness	111	111¼	111½	111¾	112	112¼	112½	112¾	113	113¼	113½	113¾	114	114¼	114½	114¾	115	115¼	115½	115¾
3/16	70.72	70.88	71.04	71.20	71.36	71.52	71.68	71.84	72.00	72.16	72.32	72.48	72.64	72.80	72.96	73.12	73.28	73.44	73.60	73.76
1/4	94.36	94.57	94.78	94.99	95.20	95.41	95.62	95.83	96.04	96.25	96.46	96.67	96.88	97.09	97.30	97.51	97.72	97.93	98.14	98.35
5/16	117.96	118.22	118.48	118.75	119.02	119.29	119.56	119.82	120.08	120.34	120.60	120.86	121.12	121.38	121.64	121.90	122.16	122.42	122.68	122.94
3/8	141.58	141.91	142.24	142.56	142.88	143.20	143.52	143.84	144.16	144.48	144.80	145.12	145.44	145.76	146.08	146.40	146.72	147.04	147.36	147.68
7/16	165.12	165.49	165.86	166.23	166.60	166.97	167.34	167.71	168.08	168.46	168.84	169.22	169.60	169.97	170.34	170.71	171.08	171.45	171.82	172.19
1/2	188.72	189.14	189.56	189.98	190.40	190.82	191.24	191.66	192.08	192.50	192.92	193.34	193.76	194.18	194.60	195.02	195.44	195.86	196.28	196.70
9/16	212.32	212.80	213.28	213.76	214.24	214.72	215.20	215.68	216.16	216.64	217.12	217.60	218.08	218.56	219.04	219.52	220.00	220.48	220.96	221.44
5/8	235.84	236.37	236.90	237.43	237.96	238.49	239.02	239.55	240.08	240.60	241.12	241.64	242.16	242.68	243.22	243.75	244.28	244.81	245.34	245.87
11/16	259.44	260.02	260.60	261.18	261.76	262.34	262.92	263.50	264.08	264.66	265.24	265.82	266.40	266.98	267.56	268.14	268.72	269.31	269.90	270.48
3/4	283.16	283.80	284.44	285.07	285.70	286.33	286.96	287.60	288.24	288.88	289.52	290.16	290.80	291.43	292.06	292.69	293.32	293.96	294.60	295.24
13/16	306.60	307.29	307.98	308.67	309.36	310.05	310.74	311.43	312.12	312.81	313.50	314.19	314.88	315.57	316.26	316.95	317.64	318.33	319.02	319.71
7/8	330.20	330.95	331.70	332.45	333.20	333.95	334.70	335.45	336.20	336.95	337.70	338.45	339.20	339.95	340.70	341.45	342.20	342.95	343.68	344.44
15/16	353.84	354.64	355.44	356.24	357.04	357.84	358.64	359.44	360.24	361.04	361.84	362.64	363.44	364.23	365.02	365.81	366.60	367.39	368.18	368.99
1	377.40	378.25	379.10	379.95	380.80	381.65	382.50	383.35	384.20	385.05	385.90	386.75	387.60	388.45	389.30	390.15	391.00	391.85	392.70	393.55
1 1/16	400.96	401.86	402.76	403.66	404.56	405.46	406.36	407.26	408.16	409.06	409.96	410.86	411.76	412.66	413.56	414.46	415.36	416.27	417.18	418.08
1 1/8	424.56	425.52	426.48	427.44	428.40	429.36	430.32	431.28	432.24	433.20	434.16	435.12	436.08	437.04	437.98	438.93	439.88	440.83	441.78	442.73
1 3/16	448.16	449.17	450.18	451.19	452.20	453.21	454.22	455.23	456.24	457.25	458.26	459.27	460.28	461.30	462.32	463.32	464.32	465.33	466.34	467.35
1 1/4	471.76	472.82	473.88	474.94	476.00	477.06	478.12	479.18	480.24	481.30	482.36	483.42	484.48	485.54	486.60	487.66	488.72	489.78	490.84	491.90
	495.32	496.43	497.54	498.65	499.76	500.89	502.00	503.12	504.24	505.36	506.48	507.60	508.72	509.83	510.94	512.05	513.16	514.27	515.38	516.49
	518.92	520.09	521.26	522.43	523.60	524.77	525.94	527.11	528.28	529.45	530.62	531.79	532.96	534.12	535.30	536.47	537.64	538.81	539.98	541.15
	542.48	543.70	544.92	546.14	547.36	548.57	549.82	551.05	552.28	553.51	554.74	555.97	557.20	558.43	559.66	560.89	562.12	563.35	564.58	565.80
	566.12	567.49	568.66	569.93	571.20	572.48	573.76	575.04	576.32	577.60	578.88	580.16	581.44	582.72	584.00	585.28	586.56	587.84	589.12	590.40

WEIGHTS OF FLAT ROLLED STEEL PER LINEAL FOOT

WIDTH IN INCHES

Thickness	116	116¼	116½	116¾	117	117¼	117½	117¾	118	118¼	118½	118¾	119	119¼	119½	119¾	120	120¼	120½	120¾
3/16	73.95	74.11	74.26	74.43	74.58	74.75	74.90	75.06	75.22	75.38	75.54	75.70	75.86	76.07	76.18	76.34	76.50	76.66	76.82	76.98
¼	98.60	98.81	99.02	99.24	99.45	99.66	99.87	100.09	100.30	100.51	100.72	100.94	101.15	101.36	101.57	101.79	102.00	102.21	102.42	102.64
5/16	123.25	123.51	123.78	124.04	124.31	124.58	124.84	125.11	125.37	125.64	125.90	126.17	126.44	126.70	126.97	127.23	127.50	127.77	128.03	128.30
3/8	147.90	148.22	148.53	148.85	149.17	149.49	149.81	150.13	150.45	150.77	151.09	151.40	151.72	152.04	152.36	152.68	153.00	153.32	153.64	153.95
7/16	172.55	172.92	173.29	173.66	174.04	174.41	174.78	175.15	175.52	175.89	176.27	176.64	177.01	177.38	177.75	178.13	178.50	178.87	179.24	179.61
½	197.20	197.62	198.05	198.47	198.90	199.32	199.75	200.17	200.60	201.02	201.45	201.87	202.30	202.72	203.15	203.57	204.00	204.42	204.85	205.27
9/16	221.85	222.33	222.80	223.28	223.76	224.24	224.72	225.19	225.67	226.15	226.63	227.11	227.59	228.06	228.54	229.02	229.50	229.98	230.45	230.93
5/8	246.50	247.03	247.56	248.09	248.62	249.15	249.69	250.22	250.75	251.28	251.81	252.34	252.87	253.40	253.94	254.47	255.00	255.53	256.06	256.59
11/16	271.15	271.73	272.32	272.90	273.49	274.07	274.65	275.24	275.82	276.41	276.99	277.58	278.16	278.74	279.33	279.91	280.50	281.08	281.67	282.25
¾	295.80	296.44	297.07	297.71	298.35	298.99	299.62	300.26	300.90	301.54	302.17	302.81	303.45	304.09	304.72	305.36	306.00	306.64	307.27	307.91
13/16	320.45	321.14	321.83	322.52	323.21	323.90	324.59	325.28	325.97	326.60	327.35	328.04	328.74	329.43	330.12	330.81	331.50	332.19	332.88	333.57
7/8	345.10	345.84	346.59	347.33	348.07	348.82	349.56	350.30	351.05	351.79	352.54	353.28	354.02	354.77	355.51	356.25	357.00	357.74	358.49	359.23
15/16	369.75	370.54	371.34	372.14	372.94	373.73	374.53	375.33	376.12	376.92	377.72	378.51	379.31	380.11	380.90	381.70	382.50	383.30	384.09	384.89
1	394.40	395.25	396.10	396.95	397.80	398.65	399.50	400.35	401.20	402.05	402.90	403.75	404.60	405.45	406.30	407.15	408.00	408.85	409.70	410.55
1 1/16	419.05	419.95	420.85	421.76	422.66	423.56	424.47	425.37	426.27	427.18	428.08	428.98	429.89	430.79	431.69	432.60	433.50	434.40	435.30	436.21
1⅛	443.70	444.65	445.61	446.57	447.52	448.48	449.44	450.39	451.35	452.30	453.26	454.22	455.17	456.13	457.09	458.04	459.00	459.95	460.91	461.87
1 3/16	468.35	469.36	470.37	471.38	472.39	473.39	474.40	475.41	476.42	477.43	478.44	479.45	480.46	481.47	482.48	483.49	484.50	485.51	486.52	487.53
1¼	493.00	494.06	495.12	496.19	497.25	498.31	499.37	500.44	501.50	502.56	503.62	504.69	505.75	506.81	507.87	508.94	510.00	511.06	512.12	513.19
1 5/16	517.65	518.76	519.88	520.99	522.11	523.23	524.34	525.46	526.57	527.69	528.80	529.92	531.04	532.15	533.27	534.38	535.50	536.61	537.73	538.85
1⅜	542.30	543.47	544.64	545.80	546.97	548.14	549.31	550.48	551.65	552.82	553.99	555.15	556.32	557.49	558.66	559.83	561.00	562.17	563.34	564.51
1 7/16	566.95	568.17	569.39	570.61	571.84	573.06	574.28	575.50	576.72	577.94	579.17	580.39	581.61	582.83	584.05	585.28	586.50	587.72	588.94	590.16
1½	591.60	592.87	594.15	595.42	596.70	597.97	559.25	600.52	601.80	603.07	604.35	605.62	606.90	608.17	609.45	610.72	612.00	613.27	614.55	615.82

WEIGHTS OF FLAT ROLLED STEEL PER LINEAL FOOT

Thickness	WIDTH IN INCHES																			
	121	121¼	121½	121¾	122	122¼	122½	122¾	123	123¼	123½	123¾	124	124¼	124½	124¾	125	125¼	125½	125¾
5/16	77.14	77.29	77.45	77.61	77.77	77.93	78.09	78.25	78.40	78.56	78.72	78.89	79.05	79.20	79.36	79.52	79.67	79.83	79.99	80.15
3/8	102.85	103.06	103.27	103.49	103.70	103.91	104.12	104.34	104.55	104.76	104.97	105.19	105.40	105.61	105.83	106.04	106.25	106.46	106.68	106.89
7/16	128.56	128.83	129.09	129.36	129.62	129.89	130.16	130.42	130.69	130.95	131.22	131.48	131.75	132.01	132.28	132.55	132.81	133.08	133.34	133.61
9/16	154.27	154.59	154.91	155.23	155.55	155.87	156.19	156.50	156.82	157.14	157.46	157.78	158.10	158.42	158.74	159.05	159.37	159.69	160.01	160.33
5/8	179.99	180.36	180.73	181.10	181.47	181.85	182.22	182.59	182.96	183.33	183.71	184.08	184.45	184.82	185.19	185.57	185.94	186.31	186.68	187.05
11/16	205.70	206.12	206.55	206.97	207.40	207.82	208.25	208.67	209.10	209.52	209.95	210.37	210.80	211.22	211.65	212.07	212.50	212.92	213.37	213.77
13/16	231.41	231.89	232.37	232.84	233.32	233.80	234.28	234.76	235.24	235 71	236.19	236.67	237.15	237.63	238.10	238.58	239.06	239.54	240.02	340.50
7/8	257.12	257.65	258.19	258.72	259.25	259.78	260.31	260.84	261.37	261.90	262.43	262.97	263.50	264.03	264.56	265.09	265.62	266.15	266.68	267.22
15/16	282.84	283.42	284.00	284.59	285.17	285.76	286.34	286.92	287.51	288.09	288.68	289.26	289.84	290.43	291.02	291.60	292.19	292.77	293.35	293.94
3/4	308.55	309.19	309.82	310.46	311.10	311.74	312.37	313.01	313.65	314.28	314.91	315.55	316.19	316.83	317.46	318.10	318.74	319.38	320.02	320.66
13/16	334.26	334.95	335.64	336.33	337.02	337.71	338.40	339.10	339.79	340.48	341.17	341.86	342.55	343.24	343.93	344.62	345 31	346.00	346.69	347.38
7/8	359.97	360.72	361.46	362.20	362.95	363.69	364.44	365.18	365.92	366.67	367.41	368.15	368.90	369.64	370.39	371.13	371.87	372.62	373.36	374.10
15/16	385.69	386.48	387.28	388.08	388.87	389.67	390.47	391.26	392.06	392.86	393.65	394.45	395.25	396.05	396.84	397.64	398.44	399.23	400.03	400.82
1	411.40	412.25	413.10	413.95	414.80	415.65	416.50	417.35	418.20	419.05	419.90	420.75	421.60	422.45	423.30	424.15	425.00	425.85	426.70	427.55
1 1/16	437.11	438.01	438.92	439.82	440.72	441.63	442.53	443.43	444.34	445.24	446.14	447.05	447.95	448.85	449.75	450.66	451.56	452.46	453.37	454.27
1 1/8	462.82	463.78	464.74	465.69	466.65	467.60	468.56	469.52	470.47	471.43	472.39	473.34	474.30	475.25	476.21	477.17	478.12	479.08	480.99	480.99
1 3/16	488.54	489.54	490.55	491.56	492.57	493.58	494.59	495.60	496.61	497.62	498.63	499.64	500.65	501.66	502.67	503.68	504.69	505.70	506.70	507.71
1 1/4	514.25	515.31	516.37	517.44	518.50	519.56	520.62	521.69	522.75	523.81	524.87	525.94	527.00	528.06	529.12	530.19	531.25	532.31	533.37	534.44
1 5/16	539.96	541.08	542.19	543.31	544.42	545.54	546.66	547.77	548.89	550.00	551.12	552.23	553.35	554.46	555.58	556.70	557.81	558.93	560.04	561.16
1 3/8	565.67	566.84	568.01	569.18	570.35	571.52	572.69	573.85	575.02	576.19	577.36	578.53	579.70	580.87	582.04	583.20	584.37	585.54	586.71	587.88
1 7/16	591.39	592.61	593.83	595.05	596.27	597.50	598.72	599.94	601.16	602.38	603.60	604.83	606.05	607.27	608.49	609.71	610.94	612.16	613.38	614.60
1 1/2	617.10	618.37	619.65	620.92	622.20	623.47	624.75	626.02	627.30	628.57	629.85	631.12	632.40	633.67	634.95	636.22	637.50	638.77	640.05	641.32

WEIGHTS OF FLAT ROLLED STEEL PER LINEAL FOOT

WIDTH IN INCHES

Thickness	126	126¼	126½	126¾	127	127¼	127½	127¾	128	128¼	128½	128¾	129	129¼	129½	129¾	130	130¼	130½	130¾
3/16	80.32	80.48	80.64	80.80	80.96	81.12	81.28	81.44	81.60	81.76	81.92	82.08	82.24	82.40	82.56	82.71	82.87	83.03	83.19	83.35
¼	107.10	107.31	107.52	107.74	107.95	108.16	108.37	108.59	108.80	109.01	109.22	109.44	109.65	109.86	110.07	110.29	110.50	110.71	110.92	111.14
5/16	133.87	134.14	134.40	134.67	134.94	135.20	135.47	135.73	136.00	136.26	136.53	136.79	137.06	137.33	137.59	137.87	138.13	138.40	138.66	138.93
⅜	160.65	160.97	161.29	161.60	161.92	162.24	162.56	162.88	163.20	163.52	163.84	164.15	164.47	164.79	165.11	165.43	165.75	166.07	166.39	166.70
7/16	187.42	187.79	188.17	188.54	188.91	189.28	189.65	190.03	190.40	190.77	191.15	191.52	191.90	192.27	192.64	193.01	193.38	193.76	194.13	194.50
½	214.20	214.62	215.05	215.47	215.90	216.32	216.75	217.17	217.60	218.02	218.45	218.87	219.30	219.72	220.15	220.57	221.00	221.42	221.85	222.27
9/16	240.97	241.45	241.93	242.41	242.89	242.36	243.84	244.32	244.80	245.28	245.75	246.23	246.71	247.19	247.67	248.15	248.62	249.10	249.58	250.06
⅝	267.75	268.28	268.81	269.34	269.87	270.40	270.94	271.47	272.00	272.53	273.06	273.59	274.12	274.65	275.19	275.72	276.25	276.78	277.31	277.84
11/16	294.52	295.11	295.69	296.28	296.86	297.44	298.03	298.61	299.20	299.78	300.37	300.95	301.54	302.12	302.70	303.29	303.87	304.46	305.04	305.63
¾	321.30	321.94	322.57	323.21	323.85	324.49	325.12	325.76	326.40	327.04	326.67	328.31	328.95	329.59	330.22	330.86	331.50	332.14	332.77	333.41
13/16	348.07	348.76	349.45	350.14	350.84	351.53	352.22	352.91	353.60	354.29	354.98	355.67	356.36	357.05	357.74	358.43	359.12	359.81	360.50	361.20
⅞	374.85	375.59	376.34	377.08	377.82	378.57	379.31	380.05	380.80	381.54	382.29	383.03	383.77	384.52	385.26	386.00	386.75	387.49	388.24	388.98
15/16	401.62	402.42	403.22	404.01	404.81	405.61	406.40	407.20	408.00	408.80	409.59	410.39	411.19	411.98	412.78	413.58	414.37	415.17	415.97	416.76
1	428.40	429.25	430.10	430.95	431.80	432.65	433.50	434.35	435.20	436.05	436.90	437.75	438.60	439.45	440.30	441.15	442.00	442.85	443.70	444.55
1 1/16	455.14	456.08	456.98	457.88	458.79	459.69	460.59	461.50	462.40	463.30	464.20	465.11	466.01	466.91	467.82	468.72	469.62	470.53	471.43	472.33
1⅛	481.95	482.90	483.86	484.82	485.77	486.73	487.69	488.64	489.60	490.55	491.51	492.47	493.42	494.38	495.34	496.29	497.25	498.20	499.16	500.12
1 3/16	508.72	509.73	510.74	511.75	512.76	513.77	514.78	515.79	516.80	517.81	518.82	519.83	520.84	521.85	522.85	523.86	524.87	525.88	526.89	527.90
1¼	535.50	536.56	537.62	538.69	539.75	540.81	541.87	542.94	544.00	545.06	546.12	547.19	548.25	549.31	550.37	551.44	552.50	553.56	554.62	555.69
1 5/16	562.27	563.39	564.50	565.62	566.74	567.85	568.97	570.08	571.20	572.31	573.43	574.55	575.66	576.78	577.89	579.01	580.12	581.24	582.35	583.47
1⅜	589.05	590.22	591.39	592.55	593.72	594.89	596.06	597.23	598.40	599.57	600.74	601.90	603.07	604.24	605.41	606.58	607.75	608.92	610.09	611.25
1 7/16	615.82	617.04	618.27	619.49	620.71	621.93	623.15	624.38	625.60	626.82	628.04	629.26	630.49	631.71	632.93	634.15	635.37	636.60	637.82	639.04
1½	642.60	643.87	645.15	646.42	647.70	648.97	650.25	651.52	652.80	654.07	655.35	656.62	657.90	659.17	660.45	661.72	663.00	664.27	665.55	666.82

WEIGHTS OF FLAT ROLLED STEEL PER LINEAL FOOT

WIDTH IN INCHES

Thickness	131	131¼	131½	131¾	132	132¼	132½	132¾	133	133¼	133½	133¾	134	134¼	134½	134¾	135	135¼	135½	135¾
3/16	83.51	83.67	83.83	83.99	84.15	84.31	84.47	84.63	84.79	84.95	85.10	85.26	85.42	85.58	85.74	85.90	86.06	86.22	86.38	86.54
¼	111.35	111.56	111.77	111.99	112.20	112.41	112.62	112.84	113.05	113.26	113.47	113.69	113.90	114.11	114.32	114.54	114.75	114.96	115.17	115.39
5/16	139.19	139.45	139.72	139.98	140.25	140.51	140.78	141.05	141.31	141.58	141.84	142.11	142.37	142.64	142.90	143.17	143.44	143.70	143.97	144.23
3/8	167.02	167.34	167.66	167.98	168.30	168.62	168.94	169.25	169.57	169.89	170.21	170.53	170.85	171.17	171.49	171.80	172.12	172.44	172.76	173.08
7/16	194.86	195.23	195.60	195.98	196.35	196.72	197.09	197.46	197.84	198.21	198.58	198.95	199.32	199.70	200.07	200.44	200.81	201.18	201.55	201.93
½	222.70	223.12	223.55	223.97	224.40	224.82	225.25	225.67	226.10	226.52	226.95	227.37	227.80	228.22	228.65	229.07	229.50	229.92	230.35	230.77
9/16	250.54	251.01	251.49	251.97	252.45	252.93	253.41	253.88	254.36	254.84	255.32	255.80	256.27	256.75	257.23	257.71	258.19	258.66	259.14	259.62
5/8	278.37	278.91	279.44	279.97	280.50	281.03	281.56	282.09	282.62	283.16	283.69	284.22	284.75	285.28	285.81	286.34	286.87	287.40	287.94	288.47
11/16	306.21	306.80	307.38	307.96	308.55	309.13	309.72	310.30	310.89	311.47	312.06	312.64	313.22	313.81	314.39	314.98	315.56	316.14	316.73	317.31
¾	334.05	334.69	334.32	335.96	336.60	337.24	337.87	338.51	339.15	339.79	340.42	341.06	341.70	342.34	342.97	343.61	344.25	344.89	345.52	346.16
13/16	361.89	362.58	363.27	363.96	364.65	365.34	366.03	366.72	367.41	368.10	368.79	369.48	370.17	370.86	371.55	372.25	372.94	373.63	374.32	375.01
⅞	389.72	390.47	391.21	391.96	392.70	393.44	394.19	394.93	395.67	396.42	397.16	397.91	398.65	399.39	400.14	400.88	401.62	402.37	403.11	403.85
15/16	417.56	418.36	419.16	419.95	420.75	421.55	422.34	423.14	423.94	424.73	425.53	426.33	427.12	427.92	428.72	429.51	430.31	431.11	431.90	432.70
1	445.40	446.25	447.10	447.95	448.80	449.65	450.50	451.35	452.20	453.05	453.90	454.75	455.60	456.45	457.30	458.15	459.00	459.85	460.70	461.55
1 1/16	473.24	474.14	475.04	475.95	476.85	477.75	478.66	479.56	480.46	481.37	482.27	483.17	484.07	484.98	485.88	486.78	487.69	488.59	489.49	490.39
1⅛	501.07	502.03	502.98	503.94	504.90	505.86	506.81	507.77	508.72	509.68	510.64	511.59	512.55	513.51	514.46	515.42	516.37	517.33	518.29	519.24
1 3/16	528.91	529.92	530.93	531.94	532.95	533.96	534.97	535.98	536.99	538.00	539.01	540.02	541.02	542.03	543.04	544.05	545.06	546.07	547.08	548.09
1¼	556.75	557.81	558.87	559.94	561.00	562.06	563.12	564.19	565.25	566.31	567.37	568.44	569.50	570.56	571.62	572.69	573.75	574.81	575.87	576.94
1 5/16	584.59	585.70	586.82	587.93	589.05	590.16	591.28	592.40	593.51	594.63	595.74	596.86	597.97	599.09	600.21	601.32	602.44	603.55	604.67	605.78
1⅜	612.42	613.59	614.76	615.93	617.10	618.27	619.44	620.61	621.77	622.94	624.11	625.28	626.45	627.62	628.79	629.96	631.12	632.29	633.46	634.63
1 7/16	640.26	641.48	642.71	643.93	645.15	646.37	647.59	648.82	650.04	651.26	652.48	653.70	654.92	656.15	657.37	658.59	659.81	661.03	662.25	663.48
1½	668.10	669.38	670.65	671.93	673.20	674.48	675.75	677.03	678.30	679.58	680.85	682.13	683.40	684.68	685.95	687.23	688.50	689.77	691.05	692.32

WEIGHTS OF FLAT ROLLED STEEL PER LINEAL FOOT

WIDTH IN INCHES

Thickness	136	136¼	136½	136¾	137	137¼	137½	137¾	138	138¼	138½	138¾	139	139¼	139½	139¾	140	140¼	140½	140¾
3/8	86.70	86.86	87.02	87.18	87.34	87.49	87.65	87.81	87.97	88.13	88.29	88.45	88.61	88.77	88.93	89.09	89.25	89.41	89.57	89.73
7/16	115.60	115.81	116.02	116.24	116.45	116.66	116.87	117.09	117.30	117.51	117.72	117.94	118.15	118.36	118.57	118.79	119.00	119.21	119.42	119.64
1/2	144.50	144.76	145.03	145.29	145.56	145.83	146.09	146.34	146.62	146.89	147.15	147.42	147.69	147.95	148.22	148.48	148.75	149.01	149.28	149.54
9/16	173.70	173.72	174.04	174.35	174.67	174.99	175.31	175.63	175.95	176.27	176.59	176.90	177.22	177.54	177.86	178.18	178.50	178.82	179.14	179.45
5/8	202.30	202.67	203.04	203.41	203.79	204.16	204.53	204.90	205.27	205.64	206.02	206.39	207.76	207.13	207.50	207.88	208.25	208.62	208.99	209.36
11/16	231.20	231.62	232.05	232.47	232.90	233.32	233.75	234.17	234.60	235.02	235.45	235.87	276.30	236.72	237.15	237.57	238.00	238.42	238.85	239.27
3/4	260.10	260.58	261.05	261.53	262.01	262.49	262.97	263.44	263.92	264.40	264.88	265.36	265.84	266.31	266.79	267.27	267.75	268.23	268.70	269.18
13/16	289.00	289.53	290.06	290.59	291.12	291.65	292.19	292.72	293.25	293.78	294.31	294.84	295.37	295.90	296.44	296.97	294.50	298.03	298.56	299.09
7/8	317.90	318.48	319.07	319.65	320.24	320.82	321.40	321.99	322.57	323.16	323.74	324.33	324.91	325.49	326.08	326.66	327.25	327.83	328.42	329.00
15/16	346.80	347.44	348.07	348.71	349.35	349.99	350.62	351.26	351.90	352.54	353.17	353.81	354.45	355.09	355.72	356.36	357.00	357.64	358.27	358.91
1 1/16	375.70	376.39	377.08	377.77	378.46	379.15	379.84	380.53	381.22	381.91	382.60	383.29	383.99	384.68	385.37	386.06	386.75	387.44	388.13	388.82
1 1/8	404.60	405.34	406.09	406.83	407.57	408.32	409.06	409.80	410.55	411.29	412.04	412.78	413.52	414.27	415.01	415.75	416.50	417.24	417.99	418.73
1 3/16	433.50	434.29	435.09	435.89	436.69	437.48	438.28	439.08	439.87	440.67	441.47	442.26	443.06	443.86	444.65	445.45	446.25	447.04	447.84	448.64
1	462.40	463.25	464.10	464.95	465.80	466.65	467.50	468.35	469.20	470.05	470.90	471.75	472.60	473.45	474.30	475.15	476.00	476.85	477.70	478.55
1 1/16	491.30	492.20	493.10	494.01	494.91	495.81	496.72	497.62	498.52	499.43	500.33	501.23	502.14	503.04	503.94	504.84	505.75	506.65	507.55	508.46
1 1/8	520.20	521.15	522.11	523.07	524.02	524.98	525.94	526.89	527.85	528.80	529.76	530.72	531.67	532.63	533.59	534.54	535.50	536.45	537.41	538.37
1 3/16	549.10	550.11	551.12	552.13	553.14	554.14	555.15	556.16	557.17	558.18	559.19	560.30	561.21	562.22	563.23	564.24	565.25	566.26	567.27	568.28
1 1/4	578.00	579.06	580.12	581.19	582.25	583.31	584.37	585.44	586.50	587.56	588.62	589.69	590.75	591.81	592.87	593.94	595.00	596.06	597.12	598.19
1 5/16	606.90	608.01	609.13	610.24	611.36	612.48	613.59	614.71	615.82	616.94	618.05	619.17	620.29	621.40	622.52	623.63	624.75	625.86	626.98	628.09
1 3/8	635.80	636.97	638.14	639.30	640.47	641.64	642.81	643.98	645.15	646.32	647.49	648.65	649.82	650.99	652.16	653.33	654.50	655.67	656.84	658.00
1 7/16	664.70	665.92	667.14	668.36	669.59	670.82	672.04	673.26	674.48	675.70	676.93	678.15	679.37	680.59	681.81	683.04	684.25	685.47	686.69	687.91
1 1/2	693.60	694.87	696.15	697.42	698.70	699.97	701.25	702.52	703.80	705.07	706.35	707.62	708.90	710.17	711.45	712.72	714.00	715.27	716.55	717.82

WEIGHTS OF FLAT ROLLED STEEL PER LINEAL FOOT

WIDTH IN INCHES

Thickness	141	141¼	141½	141¾	142	142¼	142½	142¾	143	143¼	143½	143¾	144	144¼	144½	144¾	145	145¼	145½	145¾
3/16	89.89	90.04	90.20	90.36	90.52	90.68	90.84	91.00	91.16	91.32	91.48	91.64	91.80	91.96	92.12	92.28	92.44	92.59	92.75	92.91
¼	119.85	120.06	120.27	120.49	120.70	120.91	121.12	121.34	121.55	121.76	121.97	122.19	122.40	122.61	122.82	123.04	123.25	123.46	123.67	123.89
5/16	149.81	150.08	150.34	150.61	150.87	151.14	151.40	151.67	151.94	152.20	152.47	152.73	153.00	153.26	153.53	153.79	154.06	154.33	154.59	154.86
3/8	179.77	180.09	180.41	180.73	181.05	181.37	181.69	182.00	182.32	182.64	182.96	183.28	183.60	183.92	184.24	184.55	184.87	185.19	185.51	185.83
7/16	209.74	210.11	210.48	210.85	211.22	211.59	211.97	212.34	212.71	213.08	213.45	213.83	214.20	214.57	214.94	215.31	215.69	216.06	216.43	216.80
1/2	239.70	240.12	240.55	240.97	241.40	241.82	242.25	242.67	243.10	243.52	243.95	244.37	244.80	245.22	245.65	246.07	246.50	246.92	247.35	247.77
9/16	269.66	270.14	270.62	271.09	271.57	272.05	272.53	273.01	273.49	273.96	274.44	274.92	275.40	275.88	276.35	276.83	277.31	277.79	278.27	278.74
5/8	299.62	300.15	300.69	301.22	301.75	302.28	302.81	303.34	303.87	304.40	304.94	305.47	306.00	306.53	307.06	307.59	308.12	308.65	309.19	309.72
11/16	329.59	330.17	330.75	331.34	331.92	332.51	333.09	333.68	334.26	334.84	335.43	336.01	336.60	337.18	337.77	338.35	338.94	339.52	340.10	340.69
3/4	359.55	360.19	360.82	361.46	362.10	362.74	363.37	364.01	364.65	365.29	365.92	366.56	367.20	367.84	368.47	369.11	369.75	370.39	371.02	371.66
13/16	389.51	390.20	390.89	391.58	392.27	392.96	393.65	394.34	395.04	395.73	396.42	397.11	397.80	398.49	399.18	399.87	400.56	401.25	401.94	402.63
7/8	419.47	420.22	420.96	421.70	422.45	423.19	423.94	424.68	425.42	426.17	426.91	427.65	428.40	429.14	429.89	430.63	431.37	432.12	432.86	433.60
15/16	449.44	450.23	451.03	451.83	452.62	453.42	454.22	455.01	455.81	456.61	457.40	458.20	459.00	459.79	460.59	461.39	462.19	462.98	463.78	464.58
1	479.40	480.25	481.10	481.95	482.80	483.65	484.50	485.35	486.20	487.05	487.90	488.75	489.60	490.45	491.30	492.15	493.00	493.85	494.70	495.55
1 1/16	509.36	510.26	511.17	512.07	512.97	513.88	514.78	515.68	516.59	517.49	518.39	519.29	520.20	521.10	522.00	522.91	523.81	524.71	525.62	526.52
1 1/8	539.32	540.28	541.24	542.19	543.15	544.10	545.06	546.02	546.97	547.93	548.89	549.84	550.80	551.75	552.71	553.67	554.62	555.58	556.53	557.49
1 3/16	569.29	570.29	571.30	572.31	573.32	574.33	575.34	576.35	577.36	578.37	579.38	580.39	581.40	582.41	583.42	584.43	585.44	586.44	587.45	588.46
1 1/4	599.25	600.31	601.37	602.44	603.50	604.56	605.62	606.69	607.75	608.81	609.87	610.94	612.00	613.06	614.12	615.19	616.25	617.31	618.37	619.44
1 5/16	629.31	630.33	631.44	632.56	633.67	634.79	635.90	637.02	638.14	639.25	640.37	641.48	642.00	643.71	644.83	645.94	647.06	648.18	649.29	650.41
1 3/8	659.17	660.34	661.51	662.68	663.85	665.02	666.19	667.35	668.52	669.69	670.86	672.03	673.20	674.37	675.54	676.70	677.87	679.04	680.21	681.38
1 7/16	689.14	690.36	691.58	692.80	694.02	695.24	696.47	697.69	698.91	700.13	701.35	702.58	703.80	705.02	706.24	707.46	708.69	709.91	711.13	712.35
1 1/2	719.10	720.37	721.65	722.92	724.20	725.47	726.75	728.02	729.30	730.57	731.85	733.12	734.40	735.67	736.95	738.22	739.50	740.77	742.05	743.32

U. S. Standard Gauge for Iron and Steel Plates

Adopted as Standard by American Railway Master Mechanics Association and Association of American Steel Manufacturers.

Number of Gauge	Approximate Thickness in Fractions of an Inch	Approximate Thickness in Decimal Parts of an Inch	Approximate Thickness in Millimeters	Weight per Square Foot in Pounds Avoirdupois, Iron	Weight per Square Foot in Pounds, Avoirdupois, Steel	Weight per Square Inch in Pounds Avoirdupois, Steel	Number of Gauge
0000000	1—2	.5	12.70	20.	20.4	.1416	0000000
000000	15—32	.46875	11.91	18.75	19.125	.1328	000000
00000	7—16	.4375	11.11	17.50	17.85	.1239	00000
0000	13—32	.40625	10.32	16.25	16.575	.1151	0000
000	3—8	.375	9.53	15.	15.3	.1062	000
00	11—32	.34375	8.73	13.75	14.025	.0967	00
0	5—16	.3125	7.94	12.50	12.75	.0885	0
1	9—32	.28125	7.14	11.25	11.475	.0796	1
2	17—64	.265625	6.75	10.625	10.8375	.0752	2
3	1—4	.25	6.35	10.	10.2	.0708	3
4	15—64	.234375	5.95	9.375	9.5625	.0664	4
5	7—32	.21875	5.56	8.75	8.925	.0619	5
6	13—64	.203125	5.16	8.125	8.2875	.0575	6
7	3—16	.1875	4.76	7.5	7.65	.0531	7
8	11—64	.171875	4.37	6.875	7.0125	.0487	8
9	5—32	.15625	3.97	6.25	6.375	.0442	9
10	9—64	.140625	3.57	5.625	5.7375	.0398	10
11	1—8	.125	3.18	5.	5.1	.0354	11
12	7—64	.109375	2.78	4.375	4.4625	.0309	12
13	3—32	.09375	2.38	3.71	3.825	.0265	13
14	5—64	.078125	1.98	3.125	3.1875	.0221	14
15	9—128	.0703125	1.79	2.8125	2.86875	.0199	15
16	1—16	.0625	1.59	2.5	2.55	.0177	16
17	9—160	.05625	1.43	2.25	2.295	.0159	17
18	1—20	.05	1.27	2.	2.04	.0141	18
19	7—160	.04375	1.11	1.75	1.785	.0124	19
20	3—80	.0375	0.953	1.50	1.53	.0106	20
21	11—320	.034375	0.873	1.375	1.4025	.0096	21
22	1—32	.03125	0.794	1.25	1.275	.0088	22
23	9—320	.028125	0.714	1.125	1.1475	.0079	23
24	1—40	.025	0.635	1.	1.02	.0070	24
25	7—320	.021875	0.556	.875	.8925	.0062	25
26	3—160	.01875	0.476	.75	.765	.0053	26
27	11—640	.0171875	0.437	.6875	.70125	.0048	27
28	1—64	.015625	0.397	.625	.6375	.0044	28
29	9—640	.0140625	0.357	.5625	.57375	.0039	29
30	1—80	.0125	0.318	.5	.51	.0035	30
31	7—640	.0109375	0.278	.4375	.44625	.0031	31
32	13—1280	.01015625	0.258	.40625	.414375	.0028	32
33	3—320	.009375	0.238	.375	.3825	.0026	33
34	11—1280	.00859375	0.218	.34375	.350625	.0024	34
35	5—640	.0078125	0.198	.3125	.31875	.0022	35
36	9—1280	.00703125	0.179	.28125	.286875	.0019	36
37	17—2560	.006640625	0.169	.265625	.2709375	.0018	37
38	1—160	.00625	0.159	.25	.255	.0017	38

STANDARD GAUGES

No. of Gauge	Thickness in Decimals of an Inch							No. of Gauge
	Birmingham	Browne & Sharpe	United States Standard Plate Iron and Steel	British Imperial	American Steel & Wire Co.	Trenton Iron Co.	Stubs Steel Wire	
7°	....	.....	.500	.500	.....	.....	....	7°
6°	....	.....	.46875	.464	.....	.....	....	6°
5°	....	.....	.4375	.432	.....	.45	....	5°
4°	.454	.46	.40625	.400	.3938	.40	....	4°
3°	.425	.40964	.375	.372	.3625	.36	....	3°
2°	.380	.3648	.34375	.348	.3310	.33	....	2°
0	.340	.32486	.3125	.324	.3065	.305	....	0
1	.300	.2893	.28125	.300	.2830	.285	.227	1
2	.284	.25763	.265625	.276	.2625	.265	.219	2
3	.259	.22942	.25	.252	.2437	.245	.212	3
4	.238	.20431	.234375	.232	.2253	.225	.207	4
5	.220	.18194	.21875	.212	.2070	.205	.204	5
6	.203	.16202	.203125	.192	.1920	.190	.201	6
7	.180	.14428	.1875	.176	.1770	.175	.199	7
8	.165	.12849	.171875	.160	.1620	.160	.197	8
9	.148	.11443	.15625	.144	.1483	.145	.194	9
10	.134	.10189	.140625	.128	.1350	.130	.191	10
11	.120	.090742	.125	.116	.1205	.1175	.188	11
12	.109	.080808	.109375	.104	.1055	.1050	.185	12
13	.095	.071961	.09375	.092	.0915	.0925	.182	13
14	.083	.064084	.078125	.080	.0800	.0800	.180	14
15	.072	.057068	.0703125	.072	.0720	.0700	.178	15
16	.065	.05082	.0625	.064	.0625	.0610	.175	16
17	.058	.045257	.05625	.056	.0540	.0525	.172	17
18	.049	.040303	.05	.048	.0475	.0450	.168	18
19	.042	.03589	.04375	.040	0410	.0400	.164	19
20	.035	.031961	.0375	.036	.0348	.0350	.161	20
21	.032	.028462	.034375	.032	.03175	.0310	.157	21
22	.028	.025347	.03125	.028	.0286	.0280	.155	22
23	.025	.022571	.028125	.024	.0258	.0250	.153	23
24	.022	.0201	.025	.022	.0230	.0225	.151	24
25	.020	.0179	.021875	.020	.0204	.0200	.148	25
26	.018	.01594	.01875	.018	.0181	.0180	.146	26
27	.016	.014195	.0171875	.0164	.0173	.0170	.143	27
28	.014	.012641	.015625	.0148	.0162	.0160	.139	28
29	.013	.011257	.0140625	.0136	.0150	.0150	.134	29
30	.012	.010025	.0125	.0124	.0140	.0140	.127	30
31	.010	.008928	.0109375	.0116	.0132	.0130	.120	31
32	.009	.00795	.01015625	.0108	.0128	.0120	.115	32
33	.008	.00708	.009375	.0100	.0118	.0110	.112	33
34	.007	.006304	.00859375	.0092	.0104	.0100	.110	34
35	.005	.005614	.0078125	.0084	.0095	.0095	.108	35
36	.004	.005	.00703125	.0076	.0090	.0090	.106	36
37	....	.004453	.006640625	.0068	.....	.0085	.103	37
38	....	.003965	.00625	.0060	.....	.0080	.101	38
39	....	.003531	.....	.....	.....	.0075	.099	39
40	....	.003144	.....	.....	.....	.0070	.097	40

FLANGED HEADS OF ALL SIZES

We Stand Unrivalled for the

Accuracy and the Workmanlike Finish

of our

Flanged and

Flanged and Dished

Boiler Heads

DEPTH OF DISH OF BOILER HEADS

Diameter / RAD.	12	14	16	18	20	22	24	30	36	42	48	54	60	72	84	96	108	120	144	180
12	1.61	1.35	1.17	1.03	.93	.83	.76	.61	.50	.43	.38	.33	.30	.27	. . .	. . .	. . .	. . .	. . .	. . .
13	1.91	1.60	1.38	1.21	1.08	.98	.90	.71	.59	.51	.44	.39	.35	.32	.29	. . .	. . .	. . .	. . .	. . .
14	2.25	1.87	1.61	1.42	1.26	1.14	1.05	.83	.69	.59	.51	.45	.41	.34	.31	.26	. . .	. . .	. . .	. . .
15	2.63	2.18	1.87	1.64	1.45	1.32	1.20	.96	.79	.68	.58	.52	.47	.39	.35	.29	.26	. . .	. . .	. . .
16	3.06	2.51	2.14	1.87	1.67	1.50	1.37	1.09	.90	.77	.66	.59	.53	.45	.38	.32	.30	.27	. . .	. . .
17	3.53	2.87	2.44	2.13	1.90	1.70	1.56	1.23	1.02	.87	.75	.67	.60	.51	.43	.36	.34	.30	.25	. . .
18	4.07	3.27	2.77	2.41	2.14	1.92	1.75	1.38	1.14	.98	.85	.75	.67	.58	.49	.42	.38	.33	.28	.25
19	4.67	3.71	3.12	2.71	2.40	2.16	1.96	1.54	1.27	1.09	.95	.84	.75	.65	.55	.47	.42	.37	.31	.27
20	5.36	4.20	3.51	3.03	2.68	2.40	2.18	1.72	1.41	1.21	1.05	.93	.83	.72	.61	.52	.46	.41	.34	.29
21	6.19	4.72	3.93	3.38	2.98	2.67	2.42	1.90	1.56	1.33	1.16	1.03	.92	.79	.67	.57	.51	.46	.38	.31
22	7.21	5.34	4.38	3.75	3.30	2.95	2.67	2.08	1.71	1.46	1.28	1.13	1.01	.86	.74	.63	.56	.51	.42	.34
23	8.52	6.01	4.87	4.15	3.64	3.25	2.93	2.29	1.88	1.60	1.40	1.24	1.11	.94	.81	.69	.61	.55	.46	.37
24	12.00	6.79	5.42	4.58	4.00	3.56	3.21	2.50	2.06	1.75	1.52	1.35	1.21	1.02	.88	.75	.67	.60	.50	.40
25	. . .	7.69	6.01	5.04	4.39	3.90	3.51	2.73	2.24	1.90	1.65	1.46	1.32	1.10	.95	.82	.73	.65	.54	.44
26	. . .	8.30	6.67	5.54	4.80	4.25	3.82	2.96	2.43	2.06	1.79	1.58	1.43	1.18	1.02	.89	.79	.70	.58	.48
27	. . .	10.29	7.41	6.09	5.24	4.63	4.16	3.21	2.63	2.23	1.93	1.71	1.54	1.27	1.09	.96	.85	.76	.63	.51
28	. . .	14.00	8.25	6.69	5.72	5.03	4.50	3.47	2.83	2.40	2.08	1.84	1.66	1.37	1.17	1.03	.91	.82	.68	.55
29	. . .	. . .	9.23	7.33	6.22	5.46	4.87	3.74	3.05	2.58	2.24	1.98	1.78	1.47	1.26	1.10	.97	.88	.73	.59
30	. . .	. . .	10.43	8.05	6.77	5.91	5.26	4.02	3.27	2.76	2.40	2.12	1.91	1.58	1.35	1.18	1.04	.94	.78	.63
31	. . .	. . .	12.03	8.85	7.36	6.39	5.68	4.31	3.51	2.96	2.57	2.27	2.04	1.69	1.44	1.26	1.11	1.00	.83	.67
32	. . .	. . .	16.00	9.75	8.00	6.90	6.11	4.62	3.75	3.16	2.74	2.42	2.17	1.80	1.54	1.34	1.18	1.07	.88	.71
33	. . .	. . .	. . .	10.80	8.70	7.45	6.57	4.94	4.00	3.37	2.92	2.58	2.31	1.92	1.64	1.43	1.26	1.14	.94	.75
34	. . .	. . .	. . .	12.08	9.46	8.04	7.00	5.28	4.26	3.59	3.10	2.74	2.45	2.04	1.74	1.52	1.34	1.21	1.00	.80
35	. . .	. . .	. . .	13.79	10.32	8.67	7.58	5.63	4.54	3.82	3.30	2.91	2.60	2.16	1.84	1.61	1.42	1.28	1.06	.85
36	. . .	. . .	. . .	18.00	11.28	9.35	8.13	6.00	4.82	4.05	3.50	3.08	2.76	2.29	1.95	1.70	1.50	1.36	1.12	.90
37	. . .	. . .	. . .	. . .	12.40	10.09	8.71	6.38	5.11	4.29	3.70	3.26	2.92	2.42	2.06	1.80	1.59	1.44	1.19	.95
38	. . .	. . .	. . .	. . .	13.76	10.91	9.34	6.78	5.42	4.54	3.91	3.45	3.08	2.55	2.17	1.90	1.68	1.52	1.26	1.00
39	. . .	. . .	. . .	. . .	15.56	11.81	10.01	7.20	5.74	4.80	4.13	3.64	3.25	2.69	2.28	2.00	1.77	1.60	1.33	1.05
40	. . .	. . .	. . .	. . .	20.00	12.83	10.73	7.64	6.07	5.06	4.36	3.84	3.43	2.83	2.40	2.10	1.87	1.68	1.40	1.11
41	. . .	. . .	. . .	. . .	. . .	14.02	11.52	8.10	6.41	5.34	4.69	4.04	3.61	2.97	2.53	2.21	1.97	1.76	1.47	1.17
42	. . .	. . .	. . .	. . .	. . .	15.44	12.38	8.58	6.76	5.62	4.83	4.25	3.79	3.12	2.66	2.32	2.07	1.85	1.54	1.23
43	. . .	. . .	. . .	. . .	. . .	17.34	13.33	9.08	7.12	5.91	5.08	4.46	3.98	3.27	2.79	2.43	2.17	1.94	1.61	1.29
44	. . .	. . .	. . .	. . .	. . .	22.00	14.41	9.60	7.51	6.22	5.34	4.68	4.17	3.43	2.93	2.54	2.27	2.03	1.68	1.35
45	. . .	. . .	. . .	. . .	. . .	. . .	15.65	10.16	7.90	6.53	5.60	4.91	4.37	3.60	3.07	2.66	2.38	2.12	1.76	1.41
46	. . .	. . .	. . .	. . .	. . .	. . .	17.14	10.74	8.30	6.86	5.87	5.14	4.58	3.77	3.21	2.79	2.49	2.22	1.84	1.47
47	. . .	. . .	. . .	. . .	. . .	. . .	19.13	11.35	8.73	7.19	6.15	5.38	4.79	3.94	3.35	2.92	2.60	2.32	1.92	1.54

DEPTH OF DISH OF BOILER HEADS

Diameter / RAD.	12	14	16	18	20	22	24	30	36	42	48	54	60	72	84	96	108	120	144	180
48	...	...	...	...	...	...	24.00	12.00	9.17	7.54	6.43	5.62	5.00	4.12	3.50	3.05	2.71	2.42	2.01	1.61
50	...	...	...	...	...	...	...	13.42	10.06	8.25	7.02	6.13	5.45	4.48	3.80	3.31	2.94	2.63	2.19	1.75
52	...	...	...	...	...	...	...	15.03	11.10	9.02	7.65	6.67	5.92	4.86	4.12	3.58	3.18	2.85	2.37	1.89
54	...	...	...	...	...	...	...	16.92	12.20	9.83	8.31	7.24	6.42	5.25	4.46	3.87	3.43	3.08	2.56	2.03
56	...	...	...	...	...	...	...	19.26	13.37	10.70	9.01	7.82	6.93	5.66	4.80	4.17	3.69	3.32	2.75	2.18
58	...	...	...	...	...	...	...	22.32	14.67	11.62	9.75	8.43	7.47	6.09	5.16	4.48	3.96	3.56	2.95	2.35
60	...	...	...	...	...	...	...	30.00	16.10	12.61	10.52	9.11	8.04	6.54	5.54	4.81	4.25	3.81	3.16	2.52
62	...	...	...	...	...	...	...	...	17.70	13.66	11.34	9.79	8.62	7.01	5.93	5.15	4.55	4.06	3.38	2.69
64	...	...	...	...	...	...	...	...	19.57	14.80	12.22	10.51	9.24	7.51	6.33	5.49	4.85	4.32	3.60	2.87
66	...	...	...	...	...	...	...	...	21.61	16.02	13.14	11.26	9.87	8.02	6.75	5.85	5.16	4.60	3.83	3.05
68	...	...	...	...	...	...	...	...	24.17	17.34	14.12	12.04	10.56	8.54	7.18	6.22	5.49	4.90	4.07	3.24
70	...	...	...	...	...	...	...	...	27.57	18.78	15.15	12.87	11.27	9.08	7.63	6.60	5.83	5.21	4.32	3.44
72	...	...	...	...	...	...	...	...	...	20.36	16.25	13.75	12.00	9.65	8.10	7.00	6.18	5.53	4.57	3.64
74	...	...	...	...	...	...	...	...	...	22.12	17.42	14.67	12.76	10.24	8.58	7.41	6.54	5.85	4.83	3.84
76	...	...	...	...	...	...	...	...	...	24.12	18.67	15.63	13.57	10.85	9.08	7.83	6.91	6.18	5.10	4.06
78	...	...	...	...	...	...	...	...	...	26.41	20.02	16.65	14.40	11.48	9.60	8.27	7.29	6.52	5.38	4.28
80	...	...	...	...	...	...	...	...	...	29.20	21.46	17.72	15.78	12.13	10.14	8.72	7.68	6.87	5.67	4.50
82	...	...	...	...	...	...	...	...	...	...	23.04	18.86	16.19	12.81	10.69	9.19	8.08	7.23	5.96	4.73
84	...	...	...	...	...	...	...	...	...	...	24.76	20.06	17.15	13.52	11.25	9.67	8.50	7.60	6.26	4.97
86	...	...	...	...	...	...	...	...	...	...	26.67	21.33	18.15	14.25	11.84	10.16	8.93	7.97	6.57	5.21
88	...	...	...	...	...	...	...	...	...	...	28.81	22.69	19.21	15.01	12.44	10.67	9.37	8.36	6.89	5.46
90	...	...	...	...	...	...	...	...	...	...	...	24.15	20.31	15.80	13.07	11.20	9.82	8.75	7.21	5.72
92	...	...	...	...	...	...	...	...	...	...	...	25.72	21.48	16.61	13.71	11.74	10.28	9.15	7.54	5.98
94	...	...	...	...	...	...	...	...	...	...	...	27.41	22.70	17.45	14.37	12.29	10.76	9.57	7.89	6.24
96	...	...	...	...	...	...	...	...	...	...	...	29.27	24.00	18.33	15.06	12.86	11.25	10.02	8.24	6.52
98	...	...	...	...	...	...	...	...	...	...	...	...	25.37	19.25	15.77	13.44	11.75	10.48	8.59	6.80
100	...	...	...	...	...	...	...	...	...	...	...	...	26.83	20.19	16.50	14.05	12.27	10.94	8.96	7.08
102	...	...	...	...	...	...	...	...	...	...	...	...	28.39	21.18	17.26	14.67	12.80	11.41	9.33	7.37
104	...	...	...	...	...	...	...	...	...	...	...	...	...	22.45	18.03	15.30	13.34	11.88	9.72	7.67
106	...	...	...	...	...	...	...	...	...	...	...	...	...	23.27	18.83	15.95	13.90	12.36	10.11	7.98
108	...	...	...	...	...	...	...	...	...	...	...	...	...	24.38	19.66	16.62	14.47	12.84	10.51	8.29
110	...	...	...	...	...	...	...	...	...	...	...	...	...	25.53	20.51	17.32	15.05	13.35	10.92	8.61
112	...	...	...	...	...	...	...	...	...	...	...	...	...	26.75	21.39	18.04	15.65	13.87	11.33	8.93
114	...	...	...	...	...	...	...	...	...	...	...	...	...	28.01	22.30	18.76	16.27	14.40	11.76	9.26
116	...	...	...	...	...	...	...	...	...	...	...	...	...	29.34	23.24	19.50	16.89	14.93	12.14	9.60
120	...	...	...	...	...	...	...	...	...	...	...	...	...	...	25.25	21.06	18.20	16.08	13.09	10.30

Directions for Ordering

A sketch should accompany all orders for FLANGED and FLANGED AND DISHED HEADS with dimensions filled in, showing:

T—Thickness of metal.

O. D.—Outside diameter of head.

S—Straight flange.

O. R.—Outside radius of knuckle.

DISH—Radius of dish.

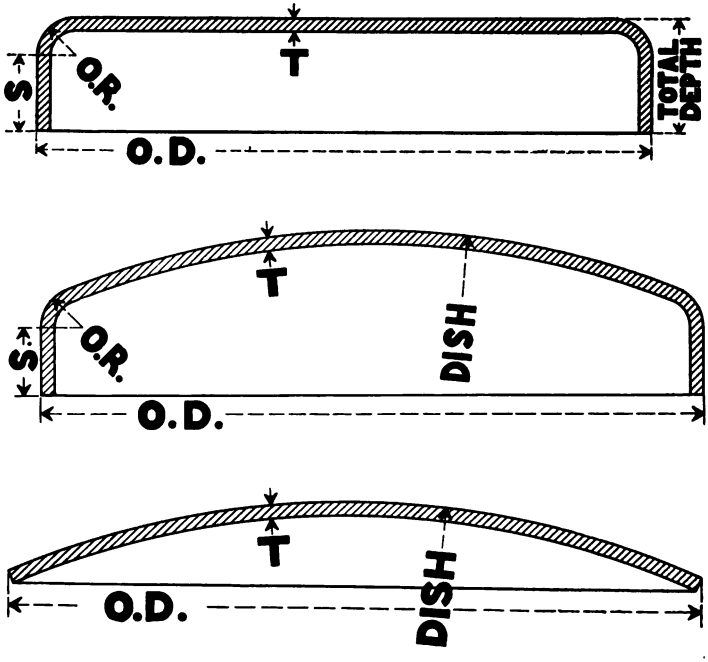

General Instructions

UNLESS otherwise instructed, we will flange all heads with the outside radius of knuckle equal to three times the thickness of the metal.

Heads that are flanged and dished should be dished to a radius equal to the outside diameter of the head when flanged.

For depths of dish, see tables on pages 62 and 63.

While we cannot guarantee exact diameters, nor absolute uniformity in sizes of our flanged heads, we aim to make them with the least possible variation in size.

We supply forms similar to sketches on opposite page for the convenience of customers wishing to order flanged heads. These forms are printed in copying ink, and will be forwarded upon request.

Manholes

WE flange manholes in heads in three styles—PLAIN FLANGED, REINFORCED and BANDED—all having machine-faced joint seats.

In the PLAIN FLANGED manholes the thickness of the metal is somewhat reduced on the face. This is most pronounced in thin heads.

The BANDED manhole consists of a band shrunk on the flange and secured with studs. It is applicable to either flat or dished heads, being particularly adapted to the former, where the chief requirement is a broad joint surface.

The REINFORCED manhole is peculiarly adapted to dished heads, where it meets the two requirements of a broad joint surface and the full strength of the head by more than compensating for the metal removed to form the hole. The reinforcing ring is shrunk on and is secured with rivets. (See illustrations, page 97.)

We make these manholes in three sizes, 10 x 14, 11 x 15, and 12 x 16 inches, all a true ellipse in form.

Unless otherwise instructed, all flanged manholes will be fitted complete with a ROE MANHEAD and YOKE and a rubber gasket.

We will substitute lead or asbestos gasket for the rubber when requested to do so.

We carry in stock, for immediate shipment, a copper covered, rubber or asbestos manhole gasket, 11 x 15 in size, intended for very severe service.

Other sizes can be supplied, but are not carried in stock. Prices on application.

Manholes

In ordering manholes in flanged heads specify carefully:

1. The size of Manhole wanted.
2. The style, whether Plain Flanged, Banded or Reinforced.
3. The position of the manhole.
4. The direction of the flange, whether IN or OUT.

Styles of Manholes in Flanged Heads

FLAT HEAD WITH PLAIN MANHOLE FLANGED IN

FLAT HEAD WITH TWO MANHOLES FLANGED IN

FLAT HEAD WITH BANDED MANHOLE FLANGED IN

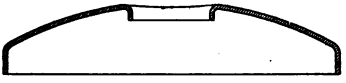

DISHED HEAD WITH PLAIN MANHOLE FLANGED IN

FLAT HEAD WITH PLAIN MANHOLE FLANGED OUT

DISHED HEAD WITH REINFORCED MANHOLE FLANGED IN

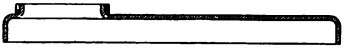

FLAT HEAD WITH BANDED MANHOLE FLANGED OUT

DISHED HEAD WITH PLAIN MANHOLE FLANGED OUT

Flue Holes

When FLUE HOLES are to be formed, a plan of the head in addition to the section should be submitted, which together should show:

D—The inside diameter of holes.

C C—The position of holes.

H—The height of flange and the direction of flange in relation to flange of head.

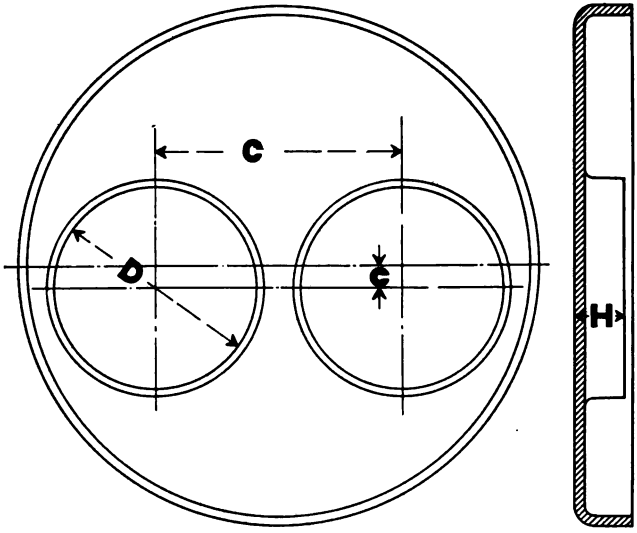

FLUE HOLES will be flanged with the radius of knuckle equal to the thickness of the metal.

Total Depth of Flue Hole Flanges Covered by Price List

Thickness of metal, in.	5/32	3/16	1/4	5/16	3/8	7/16	1/2	9/16	5/8	11/16	3/4	13/16	7/8	15/16	1
Total depth, in.	1 3/8	1 3/4	2 1/4	2 3/4	3	3 1/4	3 1/2	3 3/4	4	4 1/4	4 1/2	4 3/4	5	5 1/4	5 1/2

Hand-Holes

WE flange any size or shape of hand-holes, either cut or flanged in heads and in BENT or FLAT plates.

We have in stock DIES for flanging hand-holes 4 x 6, 5 x 7, 6 x 8 and 6 x 10 inches, each a true ellipse in form, either plain flanged or flanged and banded.

The covers and yokes for these hand-holes are stamped from open-hearth steel plate. (See illustration page 98.)

Hand-holes, cut or flanged, without any fittings, will be quoted on upon request.

Made in same styles as manholes shown on page 67.

Orders for hand-holes should give size, location, direction of flange and style wanted.

HAND-HOLE SADDLES, AND HAND-HOLE COVERS BENT OR DISHED TO FIT DIRECTLY ON PLATE, WILL BE QUOTED ON UPON REQUEST.

ROE PATENT STAMPED STEEL MANHEAD AND YOKE

SAFEST

LIGHTEST

NEATEST

BEST

The Roe Manhead

UNDER the present exacting conditions of hard service, high pressures and constant work, reliability of service in boilers is of vital importance.

The ROE MANHEAD and YOKE are the best and most reliable, fully meeting the conditions named.

MATERIAL—The best open-hearth steel plate.

FORM—The form is a true ellipse. It will be seen by the accompanying cut that the metal is disposed in a series of corrugations; the central corrugation forms a dovetail which grasps the bolt, at the same time giving the bolt sufficient freedom to draw into alignment without producing any strain in the manhead. The periphery is flanged down and then out to form the joint surface, the whole resulting in extreme strength and lightness, together with most attractive appearance.

The one bolt in the center not only draws up the joint with greater uniformity all around than any greater number of bolts can, but obviates the necessity for any other handle. The bolt is retained in its central position in the dovetail by means of a small projection fitting into the concave head of the bolt. (See cut, page 70.)

SIZE—The ROE MANHEAD is made in three sizes to fit manholes 12 x 16, 11 x 15 and 10 x 14 inches.

Roe Manhole Yoke

We carry in stock five sizes of PRESSED STEEL MANHOLE YOKE made with *flat base* for general use. Following table shows dimensions:

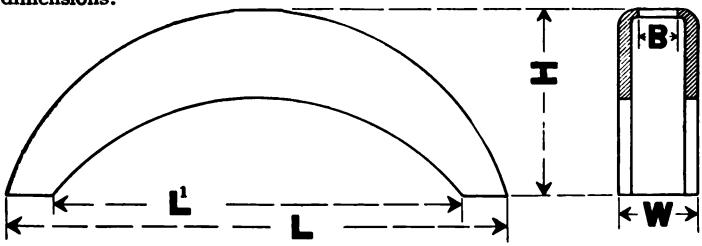

L Inches	L¹ Inches	H Inches	W Inches	B Inches	Weight Lbs.
21	17¼	7½	3	1 9/16	20
17	15	6⅞	2⅞	1⅜	13
16	14	6½	2¾	1¼	11
15	13	6⅛	2⅝	1 3/16	10
14	12	5¾	2½	1 3/16	9
10	8	4	1⅞	1 1/16	4
8	6¼	3½	1¾	13/16	3½

Roe Saddle Yoke

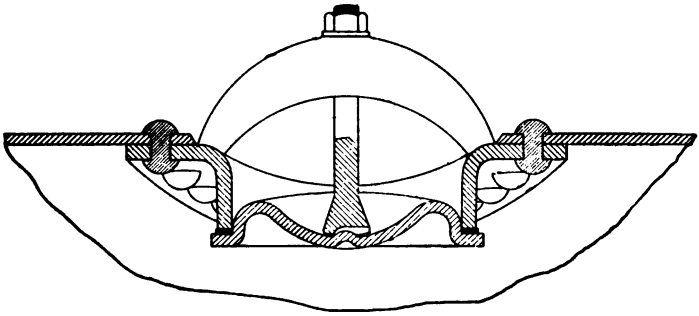

Note that this yoke has a concave base and rests directly on the saddle, not on the shell plate, making it unnecessary to countersink rivets for the yoke seat, and making it a stronger frame. We carry in stock three sizes of this yoke to fit saddle manholes 12 x 16, 11 x 15 and 10 x 14 inches.

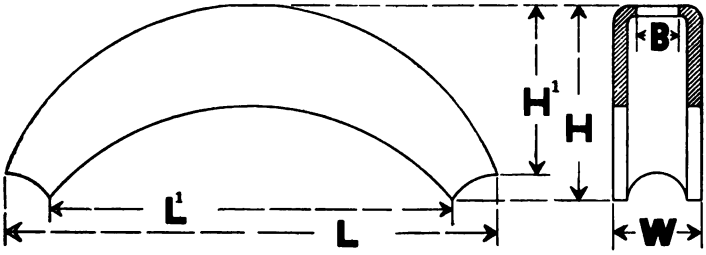

L Inches	L1 Inches	H1 Inches	H Inches	W Inches	B Inches	Weight Lbs.
15¼	12¾	5⅛	5¾	2¾	1⅜	12
14¼	11¾	4¾	5⅜	2⅝	1¼	11
13¼	10¾	4⅜	5	2½	1 3/16	10

THE GLASGOW MANHOLE SADDLE

WITH THE

ROE MANHEAD AND YOKE

A COMBINATION THAT CANNOT BE EXCELLED

"Glasgow" Manhole Saddles

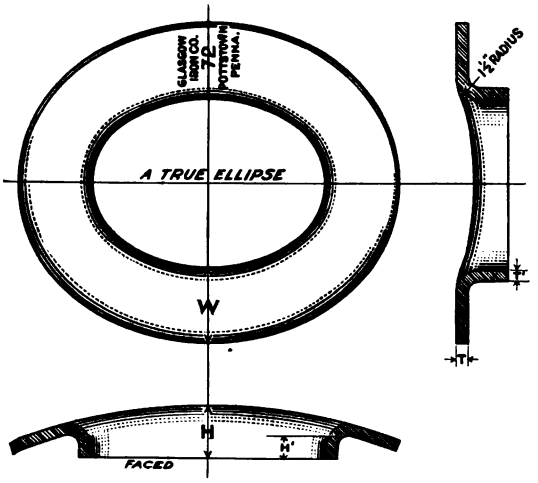

We make these saddles in three sizes of opening, 10 x 14, 11 x 15 and 12 x 16 inches, all a true ellipse in form.

We carry in stock, saddles with 11 x 15 inch opening in three thicknesses: ⅝, ¾ and 1 inch, for all diameters from 24 to 108 inches, advancing by 6 inches.

Other sizes and thicknesses will be made to order promptly.

For single riveting, W is 4¾ to 5 inches.

For double rivetting, W is 6¼ to 6½ inches.

H varies with the curvature, being made from 1 to 1½ inches at H^1

T^1 is 1/16 to ⅛ inches less than T.

Saddles will be bent to fit any diameter or radius of dish.

Saddles bent with major diameter parallel with axis of boiler are made in same sizes.

Unless otherwise ordered, these saddles will be fitted complete with a ROE MANHEAD, bolt, yoke and a rubber gasket.

We will substitute lead or asbestos gaskets for the rubber when requested to do so.

The Roe Boiler Lug

THE ROE BOILER LUG is pressed from the best open-hearth steel plate; it is designed with the metal in the direct lines of the strains, the upper or compression member being corrugated, thus producing the strongest possible structure for a given weight.

The bottom member is flanged on the sides to give stiffness as a girder, and is flat to admit of the use of rollers.

The weight of a 72-inch boiler, 18 feet long, made of $\frac{9}{16}$-inch plate is about 48,000 pounds; this includes water, piping, valves, etc., and a 4-inch brick lagging. Allowing 40,000 pounds for shearing and 50,000 pounds for tensile strength per square inch, the rivets in the upper leg of ONE 10-inch ROE LUG will bear 124,320 pounds and in the lower leg 129,500 pounds, while the greatest possible weight that can fall on any ONE LUG is 24,000 pounds, giving a factor of safety of more than FIVE.

IT IS THE BEST BOILER LUG MADE

The Roe Lug for Vertical Shells

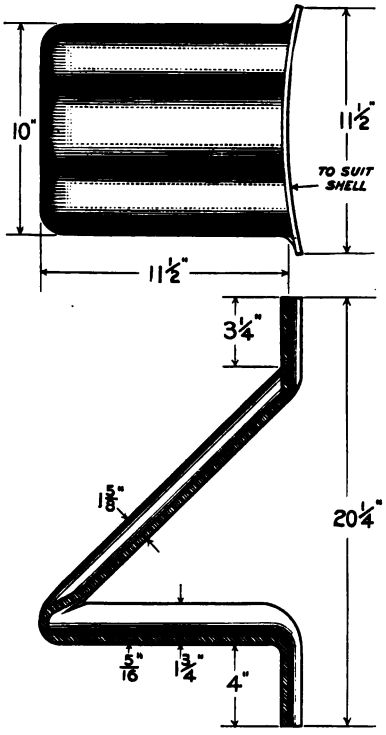

The Roe Lug is made for vertical as well as for horizontal shells. The sketch above shows sizes. Weight is about 35 lbs.

Made in one size only, and shaped to fit any diameter of shell.

A Test of the Roe Boiler Lug

A PART OF A 66-INCH BOILER SUPPORTED ON TWO 10-INCH ROE LUGS EACH RESTING ON TWO 1-INCH ROLLERS, CARRYING A LOAD OF 75,000 POUNDS.

The ROE BOILER LUG combines lightness in weight with strength and durability.

We also make these lugs for vertical boilers and tanks.

WE INVITE CORRESPONDENCE

The Roe Boiler Lug in Detail

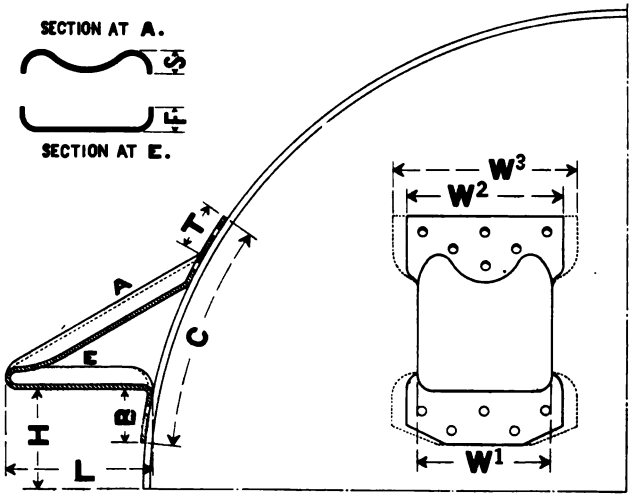

The Roe Boiler Lug is made in five sizes, covering all boiler diameters from 30 to 84 inches inclusive.

These lugs are also made with the riveting legs extra wide for use on boilers built with butt strap seams.

The rivet spacing and punching recommended for these lugs give rated efficiencies in the shells of the boilers of 82 and 86 per cent. respectively.

For details of sizes see next page.

The height above center of boiler given in table on opposite page is our standard. This can be varied to suit conditions.

SIZES OF ROE BOILER LUG

Width of Lug Inches	For Diameter of Boiler Inches	Thickness Inches	Height above Center Inches	Length of Lug Inches	Depth of Leg Inches		Extreme Length on Shell Inches	Depth of Flange Inches		Lap Joint				Butt Joint			
										Width of Leg Inches	Rivet Holes Inches	Pitch of Rivets Inches	Weight	Width of Leg Inches	Rivet Holes Inches	Pitch of Rivets Inches	Weight
W[1]			H	L	B	T	C	F	S	W[2]				W[3]			
11	84	3/8	8 1/2	12	4 1/4	3 1/2	20 1/2	2	1 7/8	13 3/8	7/8	5 3/8	49	15 5/8	7/8	6 1/2	56
	78		7 1/2														
10	72	11/32	7 1/2	11	4	3 1/4	19	1 3/4	1 5/8	11 3/4	13/16	4 5/8	37	14	13/16	5 13/16	44
	66		6 1/2														
9	60	5/16	6 1/2	10	3 3/4	3	17 1/2	1 1/2	1 3/8	10 5/8	3/4	4 1/16	27	13 1/16	3/4	5 5/16	32
	54		5 1/2														
8	48	9/32	5 1/2	9	2 1/2	2 1/2	15	1 1/4	1 1/8	9 1/2	11/16	3 5/8	19	12 5/16	11/16	4 15/16	22
	42		5														
7	36	1/4	4 1/2	8	2 1/4	2 1/4	13	1	7/8	8 3/8	5/8	3 1/16	11	11 1/4	5/8	4 1/2	13
	30		4														

Buckled Plates

Our Buckled Plates are pressed HOT, producing well defined forms as shown, all flanges being in the same plane.

This results in ready assembling, neat appearance, and, which is of vital importance in steel structures, freedom from destructive local strains which are introduced when, as is too frequently done, plates are buckled cold.

We make them in single or multiple form up to 60 inches wide and 30 feet long.

We will supply them punched and oiled or painted when desired.

Standard sizes of Buckles, for which we have dies, are, 24 x 24 to and including 54 x 54 advancing by 3 inches each way, with a depth of ¾ inch per foot of longest dimension of buckle.

The Pressed Steel Flanges

Referring to the sectional cuts on page 83

A—is a plain flat flange just as it comes from the press, except the outside diameter, this is trimmed to size after forming; the radius L is ¼-inch on all our stock dies, and applies to all thicknesses. Owing to the stretch of the metal in forming, the radius J will be about 25 per cent. greater than the sum of the radius L plus the thickness of plate; the thickness of the metal at top of hub K will be about 80 per cent. of thickness of plate in flanges of normal height. The flat part of these flanges can be made of large diameter admitting of their use as expansion joints.

B—is the same type of flange—FACED. These flanges are made of plate 1/16 to ⅛ inch heavier, and the face of flange machined to thickness specified; this makes a slightly heavier flange and gives a wider gasket seat. The inner diameter of the face is about equal to the outer diameter of the hub at M.

C—This is the same type of flange as B, with the top of hub bevelled for calking.

D—This shows a flange same as C, and in addition has the flange, or the hub, or both, drilled for bolts or rivets. Holes for bolts will be drilled ⅛ inch larger than bolts and for rivets 1/16 larger than the rivets, unless otherwise specified.

E—This is the ROLLED type of flange; it is used largely in gas plant construction; the hub is much lighter than the flange. This type of flange gives a rigid gasket seat, and, owing to the square corner inside, the bolts can be placed very close to the hub and the outside diameter be made smaller than the pressed type of flange will admit.

We are also prepared to make the larger flanges of angles, bent and welded, using the Oxy-Acetylene torch for welding.

We make saddle flanges of large diameter as well as small, bent to any reasonable radius.

We do not issue any price list of these flanges as there are no "stock sizes." The size and weight are determined by the strength required in each instance, and the price is governed by the size and weight and the number required.

Flat Flanges for Rivetted Work

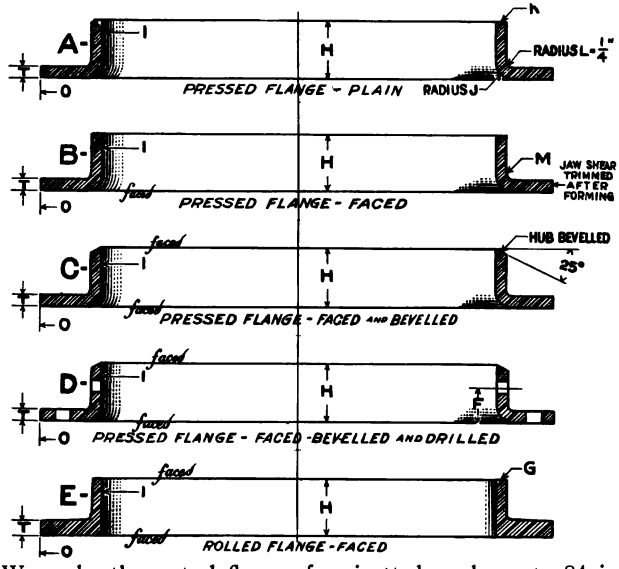

We make these steel flanges for rivetted work up to 84 inches inside diameter; note specifications on page 82.

The normal height of flanges referred to is:

Thickness of plate T	5/32	3/16	1/4	5/16	3/8	7/16	1/2	9/16	5/8	11/16	3/4	13/16	7/8	15/16	1
Height over all H	1¼	1½	2	2¼	2½	2¾	3	3¼	3½	3¾	4	4¼	4½	4¾	5

Estimates promptly given. When submitting inquiries or orders always specify:

Number of flanges wanted..... Plain or faced.....
Thickness of plate T.....Hub bevelled.....
Inside diameter I..... Thickness of G, in rolled flange.....
Outside diameter O..... Height over all H.....
Number of holes.... Size of holes....Diam. of Bolt. Circle....in flange
Number of holes..... Size of holes....Distance F.....in hub

This form printed in copying ink will be supplied to facilitate proper specifications.

Standard Flanges for Threaded Pipe

These flanges are made from the best open-hearth steel plate and are finished with bevelled edges for caulking.

They are light in weight and very strong, being practically unbreakable.

We make them FLAT, and BENT or DISHED to any radius.

Any odd shape or size will be quoted on. See illustration on page 100.

We carry in stock flanges for pipes ½ to 12 inches in diameter, plain and threaded, flat, and bent to all diameters from 12 to 96 inches, advancing by 6 inches.

We call attention to a line of HEAVY threaded pipe flanges, listed on page 87; these are designed for the higher steam pressures and for hydraulic fitting.

The line of Companion Flanges listed on page 86 is a product not excelled by anything of its kind now on the market—they are light, strong and unbreakable.

Pipe Flanges to set off the center of dished heads, and tapped parallel with axis of shell, and off center of shell, tapped parallel with diameter of shell, we now make in constantly increasing numbers.

ALL OUR PIPE FLANGES HAVE A CLEAN, FULL THREAD

Glasgow Pressed Steel Pipe Flanges

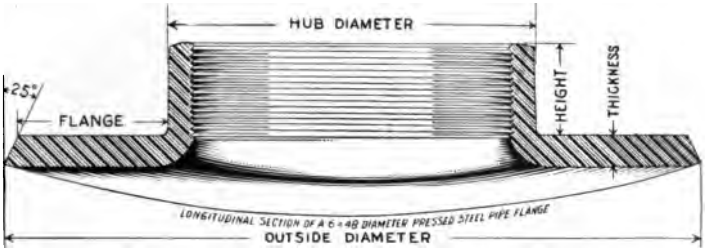

FLAT, BENT OR DISHED

Pipe Size Inches	Outside Diameter Inches	Hub Diameter Inches	Flange Inches	Height Inches	Thickness Inch	Weight Pounds
½	6.50	1.32	2.56	.407	.343	3
¾	6.50	1.56	2 43	.407	.343	3
1	7.62	1.81	2.75	.625	.375	5
1¼	7 62	2.20	2.56	.75	.375	5
1½	8.50	2.50	2.75	.875	.437	7
2	8.50	3.02	2.50	1	.437	7
2½	9.62	3.50	2.82	1.12	.5	10
3	9.62	4 13	2.50	1.25	.5	10
3½	11	4.70	2.87	1.37	.562	14
4	11	5.20	2.62	1.50	.562	14
4½	12.6	5.67	3 18	1.62	.562	18
5	12.6	6.25	2.87	1.75	.562	18
6	14	7.40	3	1.87	.625	24
7	15	8.40	3	2	.625	28
8	16.5	9.40	3.25	2.12	.625	34
9	17.5	10.4	3.25	2.25	.625	40
10	19	11.6	3.37	2.37	.687	45
12	21	13.6	3.37	2.50	.687	50

RECOMMENDED FOR PRESSURES UP TO 125 LBS. PER INCH

Glasgow Companion Flanges

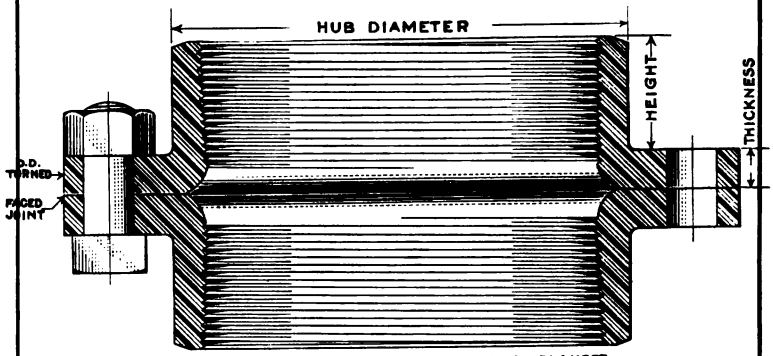

SECTION OF 6 INCH PRESSED STEEL COMPANION FLANGES

THREADED, FACED, TURNED, DRILLED AND BOLTS

Pipe Size Inches	O. D. Turned Inches	Hub Diam. Inches	Hub Height Inches	Thickness Inch	Number and Size of Bolts	Bolt Circle	Weight with Bolts
1	4	1.81	.625	.375	4—½	3	3
1¼	4.5	2.20	.75	.375	4—½	3⅜	4
1½	5	2.50	.875	.437	4—⅝	3⅞	6
2	6	3.02	1	.437	4—⅝	4¾	9
2½	7	3.50	1.12	.5	4—⅝	5½	12
3	7.5	4.13	1.25	.5	4—⅝	6	14
3½	8.5	4.70	1.37	.5	8—⅝	7	18
4	9	5 20	1.50	.5	8—⅝	7½	20
4½	9.25	5.67	1.62	.562	8—⅝	7¾	23
5	10	6.25	1.75	.562	8—⅝	8½	27
6	11	7.40	1.87	.625	8—¾	9½	34
7	12.5	8.40	2	.625	8—¾	10¾	42
8	13.5	9.40	2 12	.687	12 – ¾	11¾	52
9	15	10 4	2.25	.687	12 - ¾	13¼	61
10	16	11.6	2.37	.75	16—¾	14¼	75
12	19	13.6	2 5	.75	16—¾	17	101

RECOMMENDED FOR PRESSURES UP TO 125 LBS. PER INCH

Glasgow Heavy Pressed Steel Pipe Flanges

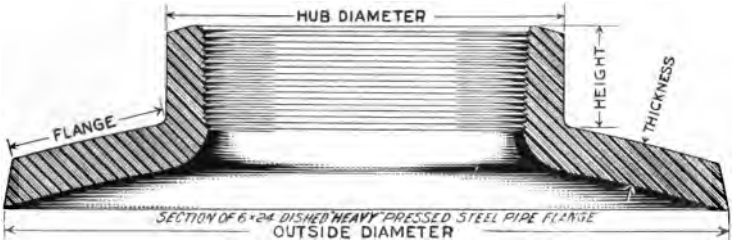

FLAT, BENT OR DISHED

Pipe Size Inches	Outside Diameter Inches	Hub Diameter Inches	Hub Height Inches	Flange Inches	Thickness Inch	Weight Pounds
1	8	2.18	.87	2.87	.562	8
1¼	8	2.50	1	2.75	.562	8
1½	9	3.02	1.12	3.00	.687	13
2	9	3.50	1.25	2 75	.687	13
2½	10.12	4.12	1.37	2.87	.75	18
3	10.12	4.68	1.50	2.62	.75	18
3½	11.5	5 18	1.62	3.00	.75	22
4	11.5	5.68	1.75	2.75	.75	22
4½	13.12	6.25	1.87	3.38	.812	27
5	13.12	6 82	2	3.06	.812	27
6	15.12	8.00	2.25	3.18	.875	44
7	16.12	9.00	2 38	3.18	.875	50
8	17.62	10.12	2.50	3.25	.937	65
9	18.62	11.12	2.62	3.25	.937	75
10	20.50	12.38	2.75	3.50	1	100
12	22.50	14.38	3	3.50	1	120

RECOMMENDED FOR PRESSURES UP TO 2000 LBS. PER INCH

Oxy-Acetylene Welding

WE are fitted with oxy-acetylene welding apparatus. This is especially applicable for building up forms made from plate too light to stand extreme flanging; for welding up angles to form large flat flanges; for making shells with smooth instead of rivetted joints; for welding up rods or shafts without changing original dimensions; for "building up" worn parts of machines, and many other applications that will suggest themselves as the process is further perfected.

Miscellaneous Flanged and Pressed Work

THE following pages illustrate from photographs a few of our many products in this line.

Expensive bronze or steel castings can often be replaced with flanged or pressed work at much lower cost when ordered in numbers.

Write us your needs, sending sketch or sample of piece required, and we will promptly quote price.

Our facilities for handling work within our capacity are complete, and our workmanship cannot be excelled.

OFF CENTER PIPE FLANGES
Threaded for Standard Wrought Iron Pipe

PRESSED STEEL "NOZZLES"

ONE-PIECE HOODS FOR GAS REVERSING VALVES
29½ x 53 inches; 16 inches deep

SQUARE FLANGED HEADS

OCTAGON FLANGED HEADS

DISHED HEAD WITH REVERSED FLANGE

DISHED HEAD WITH FLATTENED EDGE

DEEP FLANGED HEADS

DEEP FLANGED HEADS

Thickness, ⅞ inch; diameter, 42 inches; radius of dish, 42 inches; straight flange, 7¼ inches.

STAMPED STEEL GONGS

INDENTED FLANGED HEAD

A BANDED MANHOLE

REINFORCED MANHOLES

HAND-HOLES AND COVERS

RING FOR MANNING BOILER

MANHOLE SADDLES BENT OPPOSITE WAY

FLAT AND SADDLE FLANGES

ODD SHAPED PIPE FLANGES

OFFSET PIPE FLANGES FOR RIVETTED PIPE
8 inches inside diameter; 11½ inches off axis of 42-inch shell

FLAT PLACE ON DISHED HEAD

RIVETTED AND TAPPED PAD ON DISHED HEAD

CENTRIFUGAL BELL VALVES

STEAM PIPE SADDLES

BENT AND THREADED PADS

PLATE SHOWING INCUTTING, CUTTING OUT AND PUNCHING

PRESSED STEEL MOULDS FOR CASTING PIG IRON

BENT ANGLES

LIFTING-JACK PLATES

Index

Index—Continued

JOHN T. PALMER COMPANY
PHILADELPHIA